AN INVESTIGATION OF THE SYSTEM STATE MODEL AS A GENERAL PURPOSE MODELING TOOL

A Thesis

Presented to

The Faculty of the Department of Computer Science

University of Houston

In Partial Fulfillment

of the Requirements for the Degree

Master of Science

by

John Carl Puls

August 1972

AN INVESTIGATION OF THE SYSTEM STATE MODEL AS A GENERAL PURPOSE MODELING TOOL

An Abstract of a Thesis

Presented to

The Faculty of the Department of Computer Science

University of Houston

In Partial Fulfillment

of the Requirements of the Degree

Master of Science

---

by

John Carl Puls

August 1972

ABSTRACT

The system state model is both an abstract and a computational construct for representing the activities of many classes of systems. This thesis investigates, from a user's viewpoint, the adequacy and utility of the system state model as a general purpose modeling tool. The investigation deals with the representation of complex hierarchical, simultaneous and asynchronous activities, alternative forms of conceptual representations, phased levels of specificity in problem treatment, and flexibility in modifying model specifications. The model was evaluated by applying it to the following types of classical modeling tasks.

1. Turing Machine
2. Critical Path
3. Human-Machine Interaction
4. Discrete Representation of a Continuous Process
5. Discrete Representation of a Discrete Process
6. Queueing

The investigation indicates that the system state model has a wide range of application. The six examples are presented in a manner to facilitate the potential user in visualizing the application of the model to other problems. The presentation also serves as a rudimentary "user's guide" for the current IBM 360 software implementation.

TABLE OF CONTENTS

1. INTRODUCTION

1.1 Modeling

A model is simply some type of representation of the actual system which is being studied. The act of simulation involves representing the activity or behavior of the system. There is an implied static connotation to the term "model" and an implied dynamic connotation to the term "simulation".

Modeling and simulation are a rapidly expanding part of the general area of "programming". The digital computer is inherently a sequential machine. The field of modeling and simulation endeavors to overcome the limitations imposed by this sequential characteristic by allowing the computer user to model activity which may include simultaneous and asynchronous activities. The program which camouflages the sequential nature of the computer may, in general, be thought of as a model. The model user is able to imagine that his computer is performing activities simultaneously and asynchronously in the manner of real world activities. The advantages which are gained by increasing model size, speed, generality, etc., tend to be offset by the overhead and user training required. Therefore, there has been a profusion of modeling languages and simulation tools which vary widely in generality and in areas of application.

1.2 System State Model

The system state model [10] is both an abstract and a computational construct for representing the activities of many classes of systems. The representation is in the discrete time domain, at arbitrary and varying levels of specificity, and may include simultaneous, asynchronous, and hierarchically-related activities. The system state model formal construct involves (1) identification of the system $\mathcal{S}$ to be modeled, (2) the for-

mation of $\mathcal{S}$ to a static representation $\mathcal{M}$, (3) transformation of $\mathcal{M}$ to a dynamic representation $\mathcal{M}'$, and (4) evaluation, or execution of $\mathcal{M}'$. It is this execution capability which makes the system state model a simulation tool. The static representation is describable as a finite, directed graph involving loops and parallel lines. The identification of the system $\mathcal{S}$ to be modeled requires unambiguous enumeration of (1) "steps", the component parts of the processes in $\mathcal{S}$, (2) "links", the connections between steps, representing the sequence of component parts, and (3) "blocks", representing the autonomy among processes, induced by a partitioning of "steps". These three primary attributes are usually explicit in $\mathcal{S}$. In addition, there are seven secondary attributes which usually are implicit in $\mathcal{S}$. They are as follows:

(1) "Function level" of block, designating singularity or multiplicity of activity within the block

(2) "Cycle time" of block, designating minimum time in which a change may be observed in the block

(3) Exclusive "priority level", which includes interrupt capability and allows for hierarchically-related activites

(4) Input logic, which must be satisfied in order to start the next step

(5) Transition condition for emanating links, which must be satisfied in order to follow each such link

(6) Transition times, which specify the time to complete a step, given that a particular emanating link will be followed

(7) Transformations, i.e. the global effects of a step's completion

The last five of these secondary attributes qualify "steps".

Transforming $\mathcal{S}$ to the static representation $\mathcal{M}$ involves (1) converting blocks, cycle times, and function levels to "subsystems", (2) converting steps, priority levels and input logic operators to "system states", and (3) converting links, transition conditions, transition times, and transformations to "transitions". It is the subsystems, system states, and transitions which comprise the finite directed graph mentioned above. The system state model's computational construct which currently is implemented for the IBM 360 serves to transform $\mathcal{M}$ to $\mathcal{M}'$ and evaluate $\mathcal{M}'$. There is no "modeling language" or "simulation language" involved; rather user specifications are supplied in terms of basic system state model parameters. For a more detailed description of the system state model refer to Appendix A.

1.3 Other Models and Simulation Languages

A model is simply some type of representation of a system. The act of simulation deals with the dynamic activities and relationships which represent the behavior of the system. Models may be classified as either physical or mathematical. Physical models are useful in many areas of engineering, architecture, and design. It is the mathematical model, however, which is the concern of this thesis. Specifically, we are primarily concerned with numeric dynamic mathematical models which allow system perturbations to be studied.

There is no shortage of models or simulation languages. If one divides the available tools into models primarily suited for discrete

systems and models primarily suited for continuous systems, it is found that there are more models tailored for the former.

Probably the most basic model is the "sequential machine" in which the next state of the machine can be determined solely from the input to the machine and its present state. The Moore machine [15] and Mealy machine [13] are examples of this type of model.

A model which is widely used as well as widely advertised is CPM (Critical Path Method) [4]. This model is represented as a network in which nodes represent events, links represent activities, and all logic is AND.

Another model, GPSS (General Purpose System Simulator) [19] is widely used in modeling discrete systems. Its primary strength is in queueing problems. SIMSCRIPT [22] is a simulation language oriented toward the description of discrete event systems. GPSS includes special objects with fixed characteristics similar to characteristics of components of many real systems. SIMSCRIPT includes lists and list processing tools which adds to its flexibility. GASP (General Activity Simulation Program) [8] is a simulation language developed by U. S. Steel designed for the study of industrial systems. OPS-3 [2] is a discrete simulation language designed for real-time use in a time-sharing environment.

One of the primary targets of computer simulation are computers themselves. Several computer modeling languages developed by IBM which are very specific in their application area are TPAD (Tele-Processing Analysis Program), CNDP (Computer Network Design Program, and CSS (Computer Simulator System). SRPT is even more specialized in that it models the reliability of a computer system. (During certain critical times of a space flight, computer system reliability must be maintained

at 0.9995).[1]

To fill the need for modeling continuous systems, several languages such as CSMP (Continuous System Modeling Program) [7] CSSL (Continuous System Modeling Program)[17] and MIMIC [20] have been developed. They are suitable for modeling systems which can be described in terms of ordinary differential equations.

Some other examples of formal models follow. Scherr [18] has utilized a continuous-time Markov process in modeling a human terminal user interacting with a computer. A model by Klienrock [9] based on a stochastic queueing principle, investigates time sharing in terms of each user's average CPU time. Another model by Anacker and Wang [1] investigates data processing rates and a two-level memory utilization. Denning [3] has constructed a model based on the "working set of pages" to investigate dynamic memory allocation. Lewis and Shedler [11] have constructed a probablistic model of a multiprogrammed computer system operating under demand paging. The model contains an explicit representation of system overhead, the CPU requirements and paging characteristics of the program load being described statistically. Garver and Lewis [5] have formulated "probability models for buffer storage allocation problems". The authors develop models based on in-bound messages to a computer being buffered prior to processing which describe (a) the results of blocking a single memory unit for the use of diverse messages, (b) the occupancy behavior of a buffer that is

---

[1]Information concerning these four languages obtained from February 1972 telephone interview with Mr. Wayne Stanley, IBM Federal Systems Division, Manned Spacecraft Center, Houston, Texas.

tied to a single message source, and (c) the occupancy of a buffer dynamically shared among many independent sources. On still a more detailed level, Gold [6] has formulated "a model for linear programming optimization of I/O bound programs". This model deals with a class of machines having periodically addressable secondary memory and programs with sufficient constraints to fit linear programming methods. Also on a detailed level, Lowe [12] has explored the use in time shared systems of computer program models based on directed graphs and Boolean matrices.

It is obvious from this brief discussion that "models" in the loose sense of the word are plentiful. It will also be noticed that the tendency is toward developing specialized models to meet particular purposes. The role of the system state model, both as a formal and computational modeling construct, is therefore timely and valuable as a general purpose modeling tool.

1.4 System State Model Investigation

This thesis investigates the system state model (SSM) regarding its adequacy and utility as a general purpose modeling tool. The investigation deals with the following specific aspects of the model from a user's viewpoint.

1. Representation of complex hierarchical, simultaneous, and asynchronous activities.
2. Alternative forms of conceptual representation of a problem.
3. Phased level of specificity allowing macroscopic to microscopic problem treatment.
4. Flexibility in modifying model specifications as a result of simulation output.

The model was investigated by applying it to the following types of classical modeling tasks.

1. Turing Machine
2. Critical Path
3. Human Machine Interaction
4. Discrete Representation of Continuous Process
5. Discrete Representation of Discrete Process
6. Queueing

The presentation assumes that the reader is proficient in the specific problem area. It will not be necessary that he be strongly computer oriented. The approach for each type of problem is as follows:

1. Introduce the general problem area
2. Introduce the specific example
3. Specify the example formally in terms of a system to be modeled, $\mathcal{S}$
4. Transform $\mathcal{S}$ into the static model representation, $\mathcal{M}$
5. Perform the modeling operation by simulating the dynamic representation, $\mathcal{M}'$
6. Discuss the results of the example in terms of specific model aspects
7. Discuss the implications of appropriate model aspects to the general problem area

In addition to investigating the specific model aspects mentioned earlier, it should be noted that Steps 3, 4, and 5 above will instruct the reader how to "use" the system state model, and serve as a rudimentary "user's guide" for the IBM 360 software implementation. An understanding

of these steps will also allow the user to visualize the application of the model to other problems.

Each of the six modeling tasks are presented in a "stand alone" format. The sequence chosen in presenting them corresponds roughly to increasing complexity of the examples. Explanations of certain model features are presented as these features are needed to cope with the particular system being modeled. Therefore an understanding of each chapter may be somewhat dependent upon model feature descriptions in a preceding chapter. The results and conclusions pertinent to each example are presented in that example's individual chapter. The complete listing of each program may be found in the appropriate appendix. There is no intended comparison with other simulation languages. As Section 1.3 indicates, it is usually possible to find a special purpose language which may be better suited for a particular task.

Overall, the investigation of the system state model, based on its application to the six problem areas, indicated that the model does have the ability to function as a general purpose modeling tool. The utility of the model was found to vary depending upon the complexity, output formats, and analytic results embodied in each of the particular examples. The system state model construct allowed models to be generated which were adequate for the various levels of specificity required in the examples. Certain examples, particularly the critical path and the queueing problems, required a facility for interrogating the data base of the example's model. The addition of such features as the tracing of transition paths, interrogation of the static model structure, and interrogation of selected dynamic model parameters (e.g., model time, system state status, and residual transition time) would enhance the utility of the model and provide increased convenience for the user.

2. TURING MACHINE

2.1 Introduction

An important concept in automata theory is the sequential machine. This is a machine whose next state and output are determined solely from its present state and its input signal. The sequential machine may be conceptualized as a directed graph in which each node represents different past histories of the machine being modeled. The nodes have EXCLUSIVE-OR input logic (one and only one signal is allowed) and EXCLUSIVE-OR output logic. The machine always comprises exactly one subsystem, one priority level, has a cycle time of unity corresponding to a synchronizing clock, a transition condition which represents the input symbol(s), and a transformation which represents the output function.

The Turing machine [21] consists of a finite-state controller and an unlimited capacity tape memory. The finite-state controller is identical to the sequential machine mentioned above with the addition that the output function also includes tape motion. The unlimited capacity tape memory is incorporated into the transformation associated with the system state. The sequential nature of the digital computer allows many of its properties to be modeled in terms of automata theory.

2.2 Example System

The system to be modeled is a "file look-up" Turing machine [14]. Initially, the infinite tape is arranged as shown in Figure 2.1, where each N_i corresponds to an item's name, and each U_i corresponds to the item's content. We wish to present the machine with an N_i and have the machine access the U_i. The allowable symbols are 0, 1, X (separator symbol), Y (end of file symbol), A (corresponds to 0), and B (corresponds to 1). The

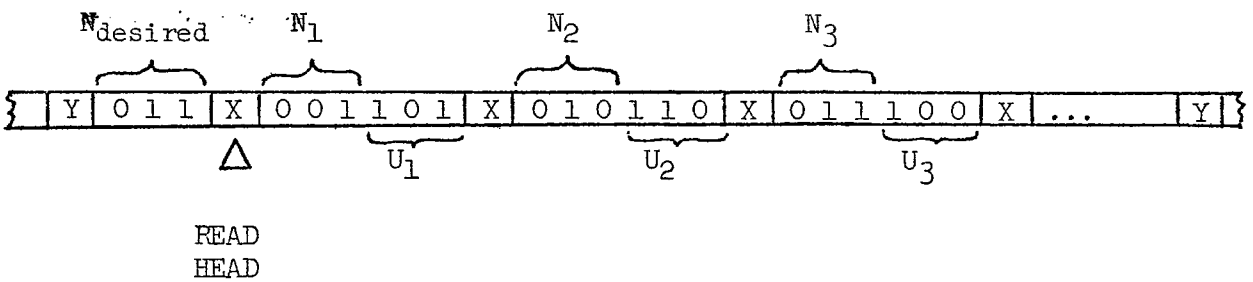

Figure 2.1 Initial Tape Condition

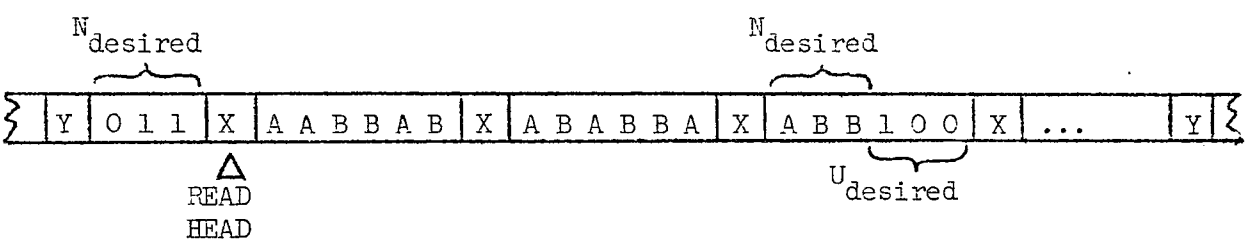

Figure 2.2 Ending Tape Condition

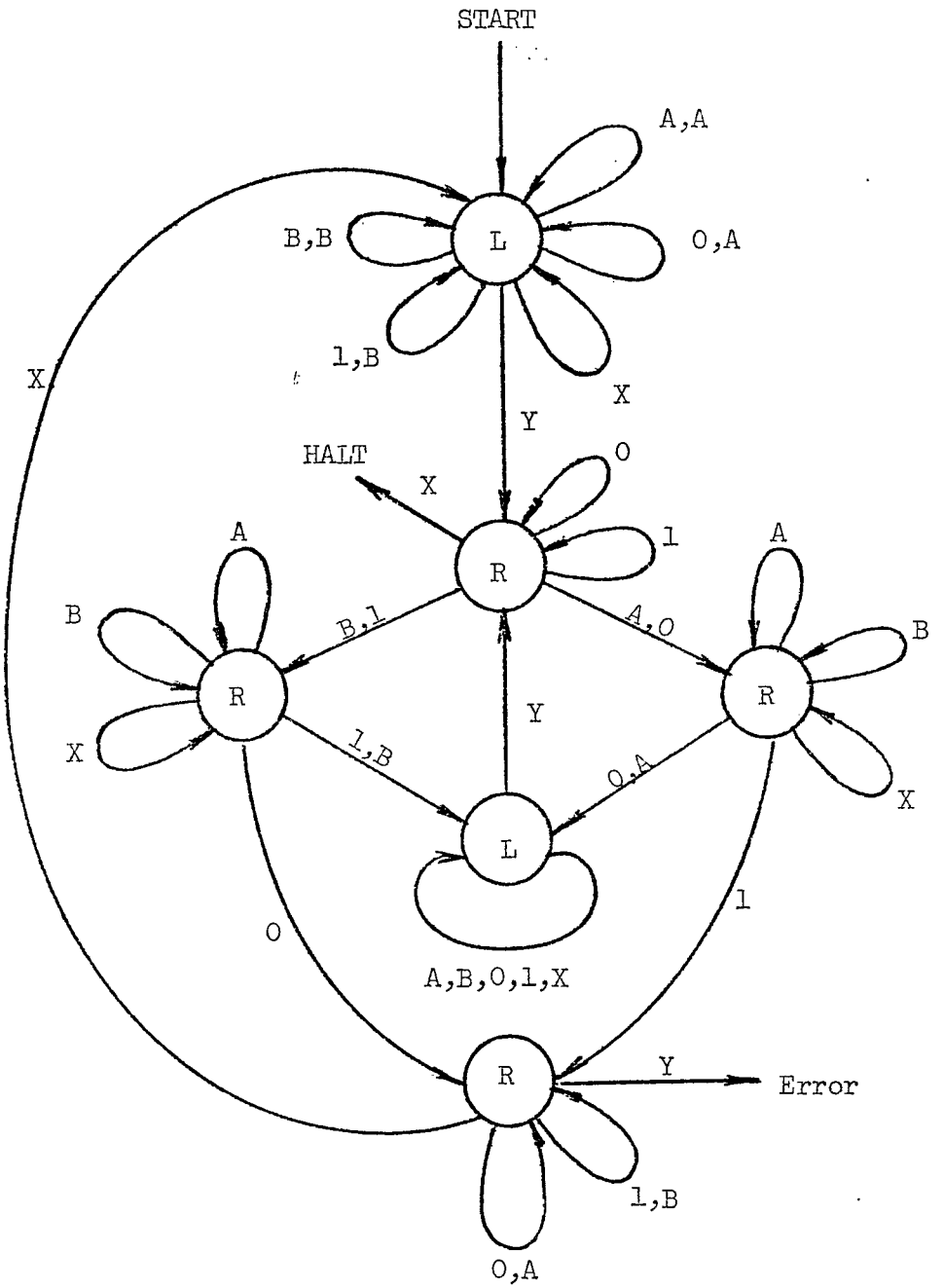

Figure 2.3 Operation of the file look-up Turing machine
(L) State corresponding to "move left and read"
(R) State corresponding to "move right and read"

name of the desired item, $N_{desired}$, is at the left end of the file. For simplicity of presentation, all N_i and U_i are three cells. Together, they form six adjacent cells. These six adjacent cells are followed by a cell containing X (or Y if this was the last item). The activity of the machine can be represented by the directed graph of Figure 2.3. After the machine completes its activity and halts, the tape will be as shown in Figure 2.2. Since A corresponds to 0 and B corresponds to 1, no information contained in the initial configuration was lost. Now, however, the desired contents, U_i are obtainable simply by moving right until a one or zero is read. The extraction of the contents is left to another machine algorithm which is not considered here.

2.3 Formal System, $\mathcal{S}$

The system described above is first transformed to the formal representation, $\mathcal{S}$, shown in Figure 2.4. The close correspondence between the directed graph of the machine operation, and Figure 2.4 indicates the ease of conceptualization involved in moving to the system state model representation. The act of starting, and the act of halting are formally spelled out as separate steps. There is no conceptual difficulty here, and this simplifies the transformation of $\mathcal{S}$ to the model representation, $\mathcal{M}$.

2.4 Model Representation, $\mathcal{M}$

The transformation from $\mathcal{S}$ to $\mathcal{M}$ is again a straight forward process. The resulting system state graph (SS-graph) is shown in Figure 2.5. It was decided to specify the Turing machine subsystem, MACH, as being at the function level which permits singularity of activity only. This is referred to as "function level 2", "$\gamma = 2$", or "software" function level. The system

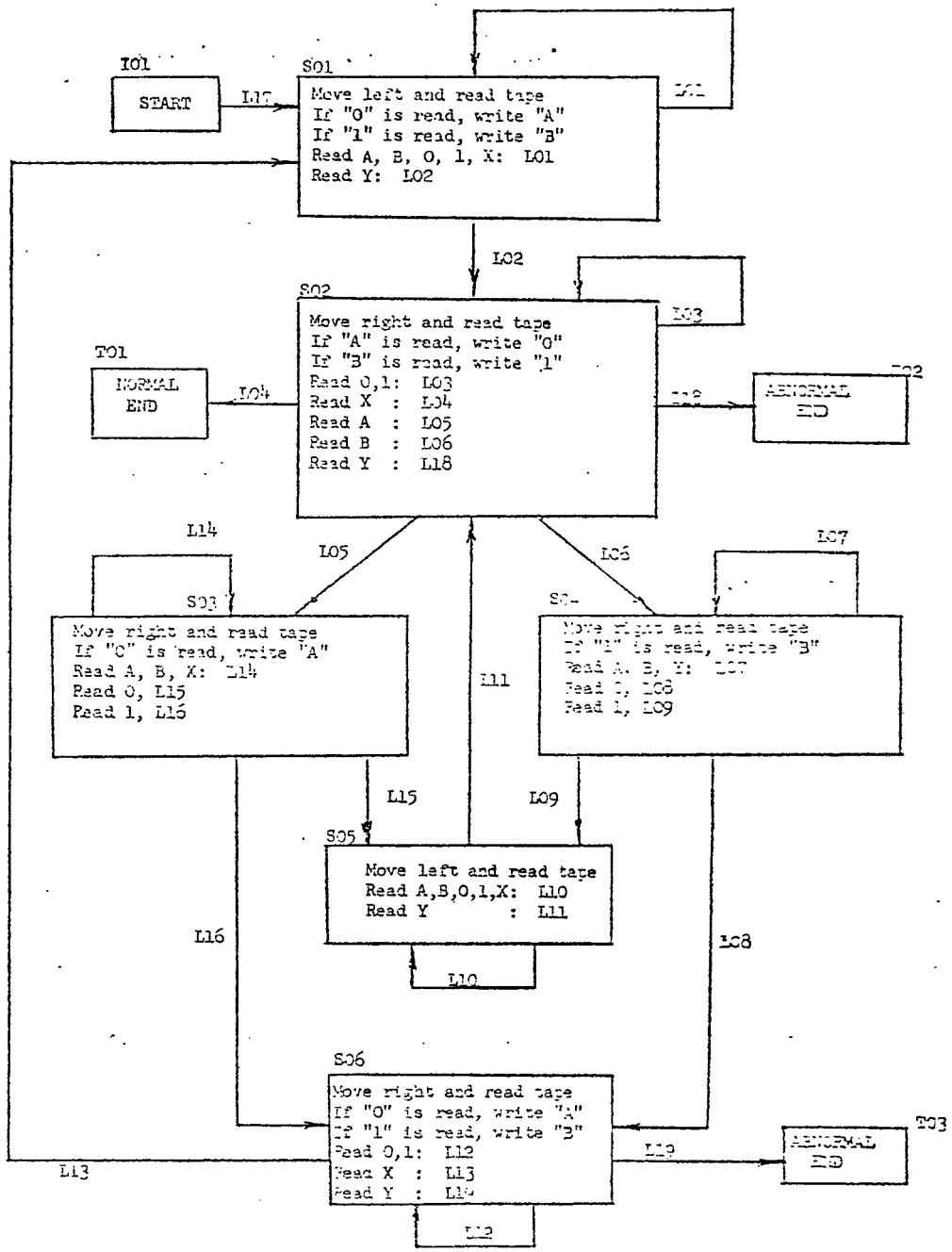

Figure 2.4 Formal representation, $\mathcal{S}'$, of the Turing machine system

itself is sequential so of course there could never be simultaneous activity of any steps. Therefore, the results of the computer run would have been the same if subsystem MACH had been specified to have "function level 1" which would have allowed multiplicity of activity within a given priority level. In either case, all system states are at the same priority level which was arbitrary chosen to have the value "1". They could have all been assigned priority 7, or priority 13, etc. and the results would not be affected. The selection of the singularity of activity function level has the advantage of emphasizing as well as enforcing the sequential nature of the Turing machine. The SSM input specifications corresponding to Figure 2.5 are shown in Figure 2.6. Explanation of the order formats may be found in Appendix A. An integer vector, ITAPE, was used to represent the Turing machine tape. Initially, ITAPE contained the values shown in Figure 2.1. To simplify computer calculations, a "3" was used to represent "Y", a "9" represented "X", a "2" represented "A", and a "4" represented "B".

2.5 Dynamic Model

The computer program listing and output is shown in Appendix C. This model actually executed for 247 cycles, including the start and stop steps. Since the termination (T) order in the input stream called for 500 cycles, the program continued to mark time, doing nothing, for 253 cycles. The wasted time is not perceptible to the user in this case. However, this method of specifying a number of cycles which will be on the "safe side" is clearly undesirable. Subsequent examples will show how this problem is handled.

The FORTRAN logic of the transformations, which appears in Subroutine ITP (see Appendix C) merely serves to move the read-write head along the tape,

Figure 2.5 Legend

Subsystem	Cycle Time	Function Level
MACH	1	Singularity of Activity

System-State	Priority	Input Logic
L02	0	⊕
All others	1	⊕

Transition	Condition	Time	Transformation
L20	TRUE	0	
L17	TRUE	1	Move left and read tape.
All others	Determined by present 'state' of machine and contents of tape	1	Move left or right as required and write on tape if required.

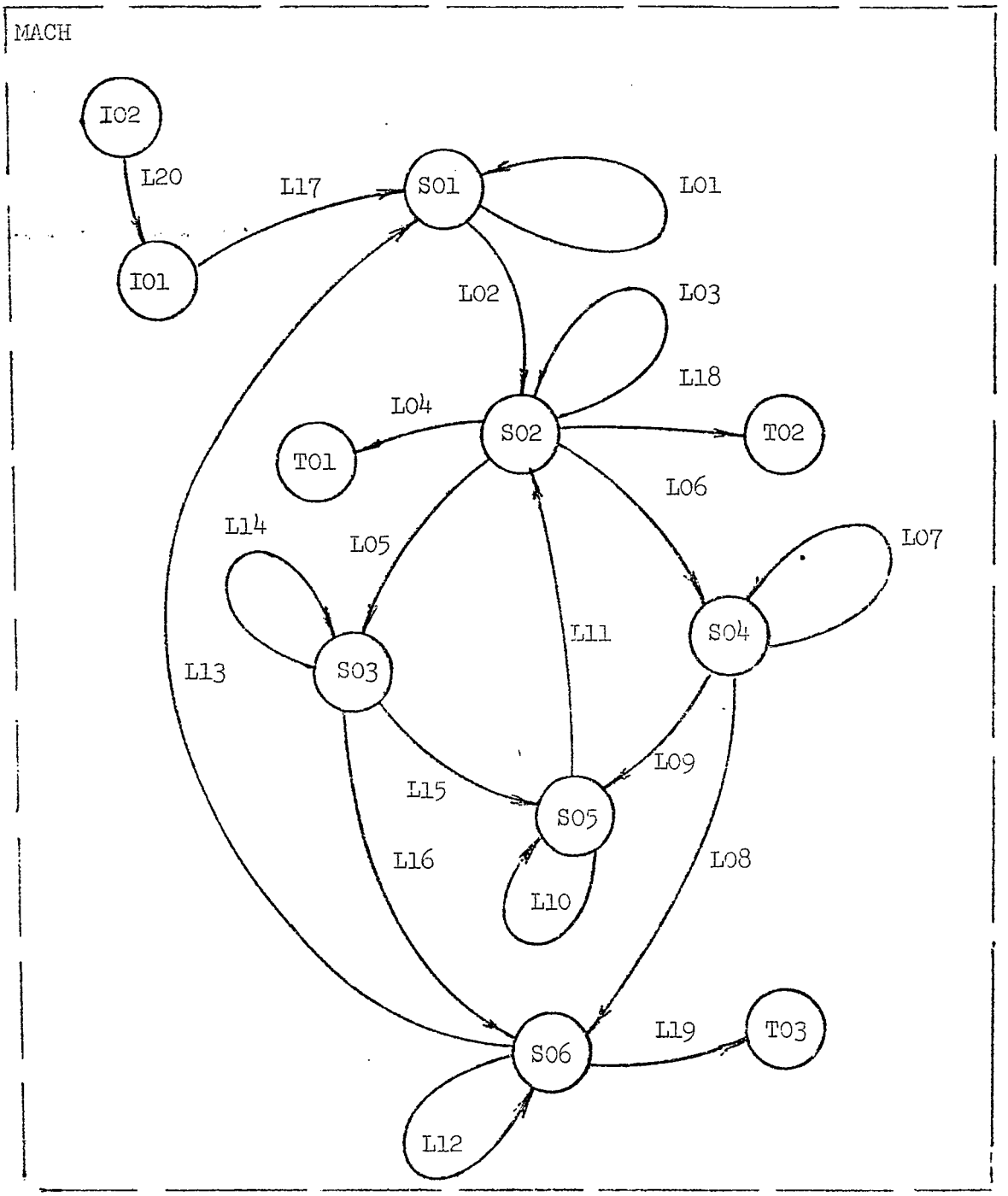

Figure 2.5 Model representation, $\mathcal{M}$, of the Turing machine system, $\mathcal{S}$.

```
*****************************************************************************
                          MODEL REPRESENTATION INPUT
*****************************************************************************
L     MACH                1       2
W     I01   MACH          1       +
W     I02   MACH          0       +
W     S01   MACH          1       +
W     S02   MACH          1       +
W     S03   MACH          1       +
W     S04   MACH          1       +
W     S05   MACH          1       +
W     S06   MACH          1       +
W     T01   MACH          1       +
W     T02   MACH          1       +
W     T03   MACH          1       +
X     L01   S01   S01     -1      1       -1
X     L02   S01   S02     -1      1       -1
X     L03   S02   S02     -1      1       -1
X     L04   S02   T01     -1      1       -1
X     L05   S02   S03     -1      1       -1
X     L06   S02   S04     -1      1       -1
X     L07   S04   S04     -1      1       -1
X     L08   S04   S06     -1      1       -1
X     L09   S04   S05     -1      1       -1
X     L10   S05   S05     -1      1       -1
X     L11   S05   S02     -1      1       -1
X     L12   S06   S05     -1      1       -1
X     L13   S06   S01     -1      1       -1
X     L14   S03   S03     -1      1       -1
X     L15   S03   S05     -1      1       -1
X     L16   S03   S06     -1      1       -1
X     L17   I01   S01     1       1       -1
X     L18   S02   T02     -1      1       -1
X     L19   S06   T03     -1      1       -1
X     L20   I02   I01     1       0
./
I     I02
./
OMORP
OSYML
OSACT
OMNTR MACH
T     500
```

Figure 2.6 Input specifications for the Turing machine model representation shown in Figure 2.5. The "L" order defines a subsystem, the "W" orders define system states, and the "X" orders define transitions. For complete program listing see Appendix C.

by incrementing or decrementing the value of I, which is a pointer to the "cell" of ITAPE currently under consideration. The frequent calls of "Subroutine SHOW" simply show ITAPE as its contents are modified during the execution of the problem. Only the beginning and ending tape conditions are shown in Appendix C due to space limitations. The transition condition for each transition is simply a logical variable. For example, "SW4" determines the condition of L04; "SW14" determines the condition of L14, etc. The appropriate values are assigned to the logical variables by the transformations during each cycle of the model, to allow proper branching in the next cycle.

2.6 Example Results

This example shows that modeling the Turing machine and simulating its activity is most straight forward. This is because the sequential machine construct of the Turing machine is a subset of the system state model construct.

2.7 General Conclusion

The directed graph, such as Figure 2.3, which is widely used in automata theory is readily mapped into a system, $\mathcal{S}$, suitable for modeling. It is not only close to the formal $\mathcal{S}$ representation, but is also a subset of the formal $\mathcal{M}$ representation as specified in the SS-graph. In fact, the directed graph of the sequential machine, with suitable initial conditions, is an SS-graph in which there is one subsystem with unity cycle time and singularity of activity, in which each node has EXCLUSIVE-OR, and in which all transition times are unity. The simplicity of the SS-graph means that a minimal amount of coding is involved in the computer programming of this type of problem.

The system state model could be a valuable teaching aid in courses dealing with the design and testing of automata. Actually, the students would only need a brief period of instruction in formulating the automata graph into an SS-graph suitable for coding and computer testing.

3. CRITICAL PATH

3.1 Introduction

Construction projects and manufacturing processes are frequently modeled by the Critical Path Method (CPM). This procedure is a mandatory tool for companies bidding on government contracts and is widely used by industry in general to schedule, allocate resources, and monitor progress. CPM maps the job or process into a directed graph in which the links represent tasks and the nodes represent points in time. Both input and output logic at each node is a logical "AND". CPM usually assumes, for each task, the least time, longest time, and likely time for completion. These times may then be used to obtain an expected time for each task. At any rate, there is an assumption of time for each link which the modeler may as well treat as a single specification, whether it is constant, deterministic or probablistic.

3.2 Example System

The obvious challenge in using CPM is to map accurately all tasks to the directed graph without overlooking anything. For the purpose of this example, assume the system to be the construction of a light industrial building consisting of a slab foundation, structural steel frame and some light machinery. It will be assumed that the construction sequence maps to the critical path diagram shown in Figure 3.1. The dotted links represent additional input logic required for nodes which are not "directly connected" by tasks. This graph in Figure 3.1 could, of course, be a subset of a much larger project.

The investigation is based on the assumption that the system is correctly mapped to the CPM diagram. In effect then, the diagram of the project shown in Figure 3.1 becomes the system. It will be [illegible]

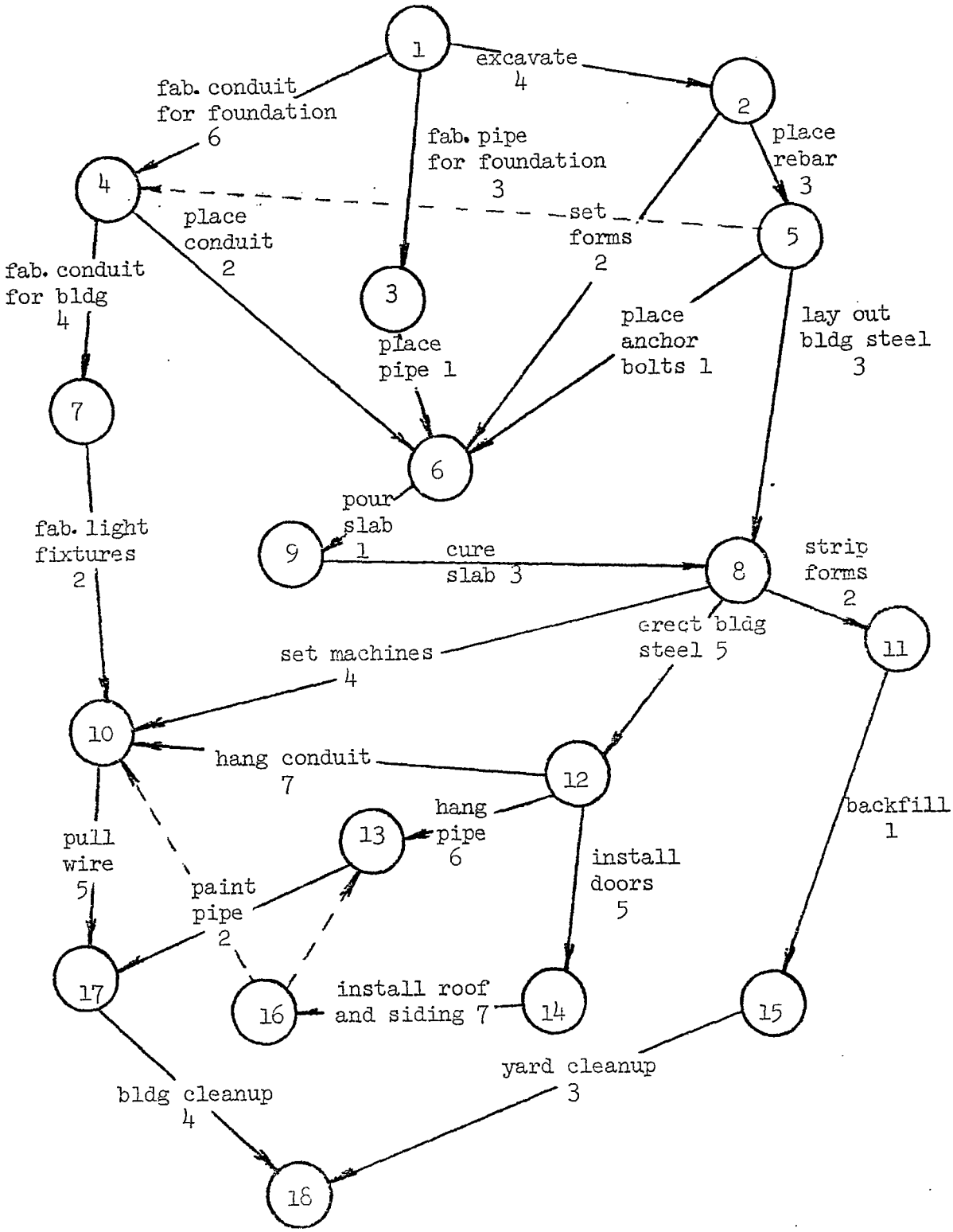

Figure 3.1 Critical path diagram for construction project. Numbers on links represent task time in days.

that the critical path diagram can be mapped directly into the system state model representation. The nodes will map to system states and the links will map to transitions. An alternate approach will be shown in which the links map to system states. The latter approach will allow the critical path diagram to first be separated into subsystems (for example, piping, electrical, structural) which can proceed autonomously. Conceptualization on a subsystem level was not present in the original critical path diagram.

3.3 Formal System, $\mathcal{S}$

3.3.1 Direct Map Approach

In this approach, the activities denoted by a node's emanating arrows in the critical path diagram map to a step $\mathcal{S}$. The sequencing of the activities denoted by the arrows in the critical path diagram map to links in $\mathcal{S}$. We are saying, in effect, that the activity of step S01 in Figure 3.2 is "fabricate conduit for foundation, fabricate pipe for foundation, and excavate for foundation". Or we could have conceptualized the activity of this step as "perform the tasks indicated by links 1-4, 1-3, and 1-2 shown in the critical path diagram of Figure 3.1." The transition times for links emanating from S01, are of course, simply the times of the corresponding tasks as shown on links 1-4, 1-3, and 1-2 of the critical path diagram. This conceptualization is straight forward, but does not hold for the dotted links shown in Figure 3.1. They represented "dummy tasks" of zero time which were required to maintain the logic of the diagram. For example, dotted link 5-4 in Figure 3.1 might have been required to allow "place rebar" (link 2-5) to complete before "place conduit" (link 4-6) started, simply

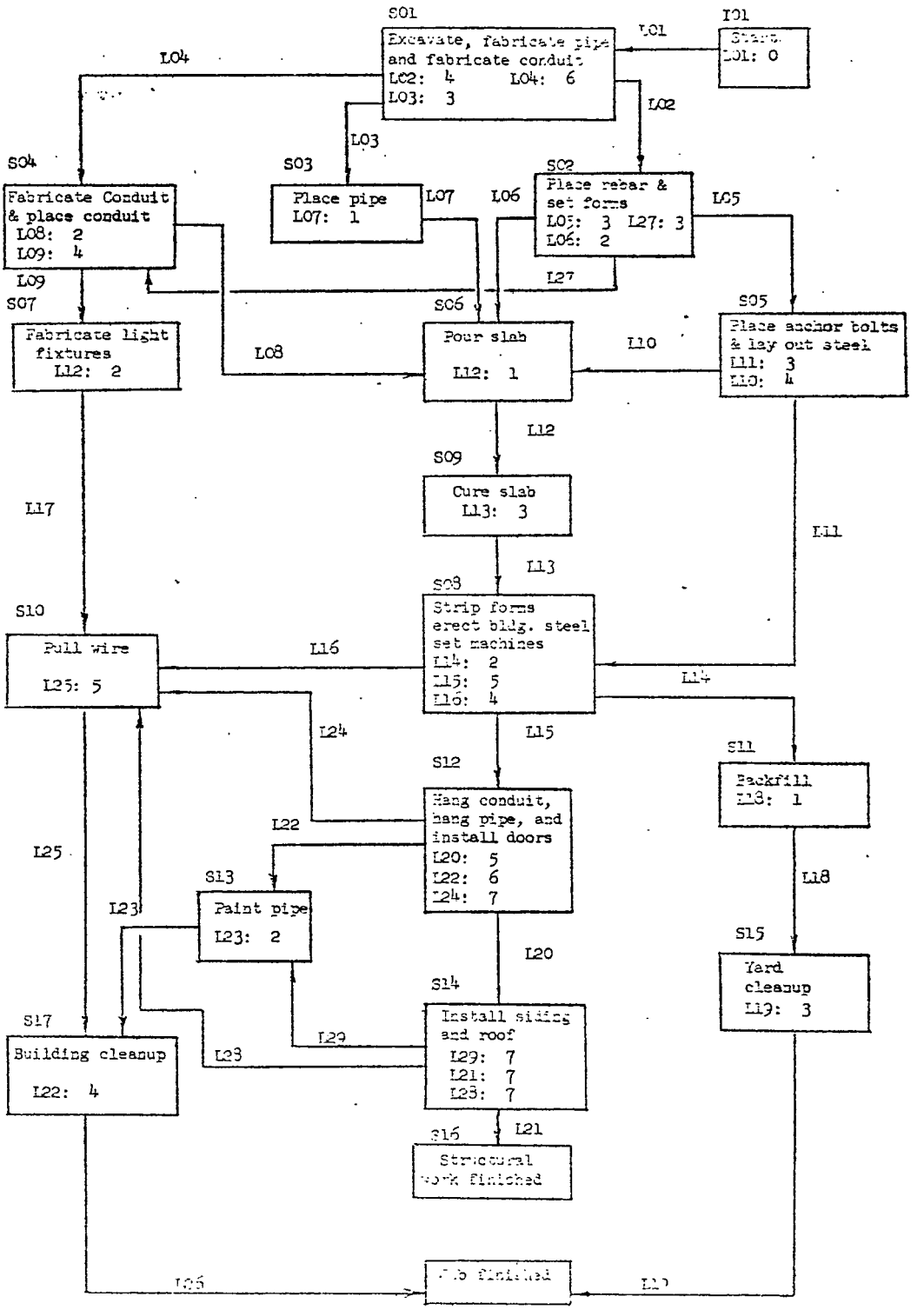
S01
Excavate, fabricate pipe and fabricate conduit
L02: 4 L04: 6
L03: 3
I01
Start
L01: 0
L01
L02
L03
L04
S04
Fabricate Conduit & place conduit
L08: 2
L09: 4
S03
Place pipe
L07: 1
L07
L06
S02
Place rebar & set forms
L05: 3 L27: 3
L06: 2
L05
L27
L09
S07
Fabricate light fixtures
L12: 2
S06
Pour slab
L12: 1
L08
L10
S05
Place anchor bolts & lay out steel
L11: 3
L10: 4
L12
S09
Cure slab
L13: 3
L17
L11
L13
S08
Strip forms erect bldg. steel set machines
L14: 2
L15: 5
L16: 4
S10
Pull wire
L25: 5
L16
L14
L24
L15
S11
Backfill
L18: 1
S12
Hang conduit, hang pipe, and install doors
L20: 5
L22: 6
L24: 7
L22
L25
S13
Paint pipe
L23: 2
L23
L18
S15
Yard cleanup
L19: 3
L20
S14
Install siding and roof
L29: 7
L21: 7
L28: 7
S17
Building cleanup
L22: 4
L29
L28
S16
Structural work finished
L21
L26
L19

Figure 3.2. [illegible]

because of some craft union agreement between the electricians and the iron workers. At any rate, the dotted link has imposed an additional constraint on tasks 4-7 and 4-6, namely that they can begin only when task 2-5 is completed. This constraint is easily handled in the formal $\mathcal{S}$ representation by adding link L27 from step S02 to step S04. Link L27 has transition time = 3, the same as L05 which corresponded directly to "place rebar". One is saying, in effect with L27, "place rebar and proceed to step S04". The constraints on starting step S04 are therefore maintained. Similar reasoning leads to replacement of dotted links 16-13 and 16-10 with transitions L29 and L28 respectively.

An initial step, I01, was included simply to "start" the construction project. Its emanating link completes in zero time, so overall project time will not be affected. It is convenient to conceptualize $\mathcal{S}$ using the "initial" step of zero time since the system state model construct includes the "initial" system state which completes its activity in zero time, and serves as a means of starting dynamic modeling. (See appendix A for more information on the initial system state). Note that only a link from an initial step may be conceptualized to take place in zero time.

3.3.2 Subsystem Approach

In this approach, the arrows of the critical path diagram, which actually represent tasks, map to steps in $\mathcal{S}$. The subsystem approach also involves partitioning $\mathcal{S}$ into autonomous blocks (which will become subsystems in the model representation). The system $\mathcal{S}$ is conceptualized to consist of three blocks; structural, piping, and electrical as shown in Figure 3.3. The transition times for all links emanating from a given step are, of course, equal, since the step's (task's) completion time

Figure 3.3 Legend

Blocks :	Structural Piping Electrical	Unity cycle time, multiplicity of activity
Steps :	I01, I02, I03 T01, T02 All others	Initiate activity Terminate activity Correspond to tasks in Figure 3.1 AND input logic Uniform priority
Links :	L36, L37, L38 All others	Time = 0 (initiate activity) Time = time of their parent task Transition condition = TRUE No transformations implied

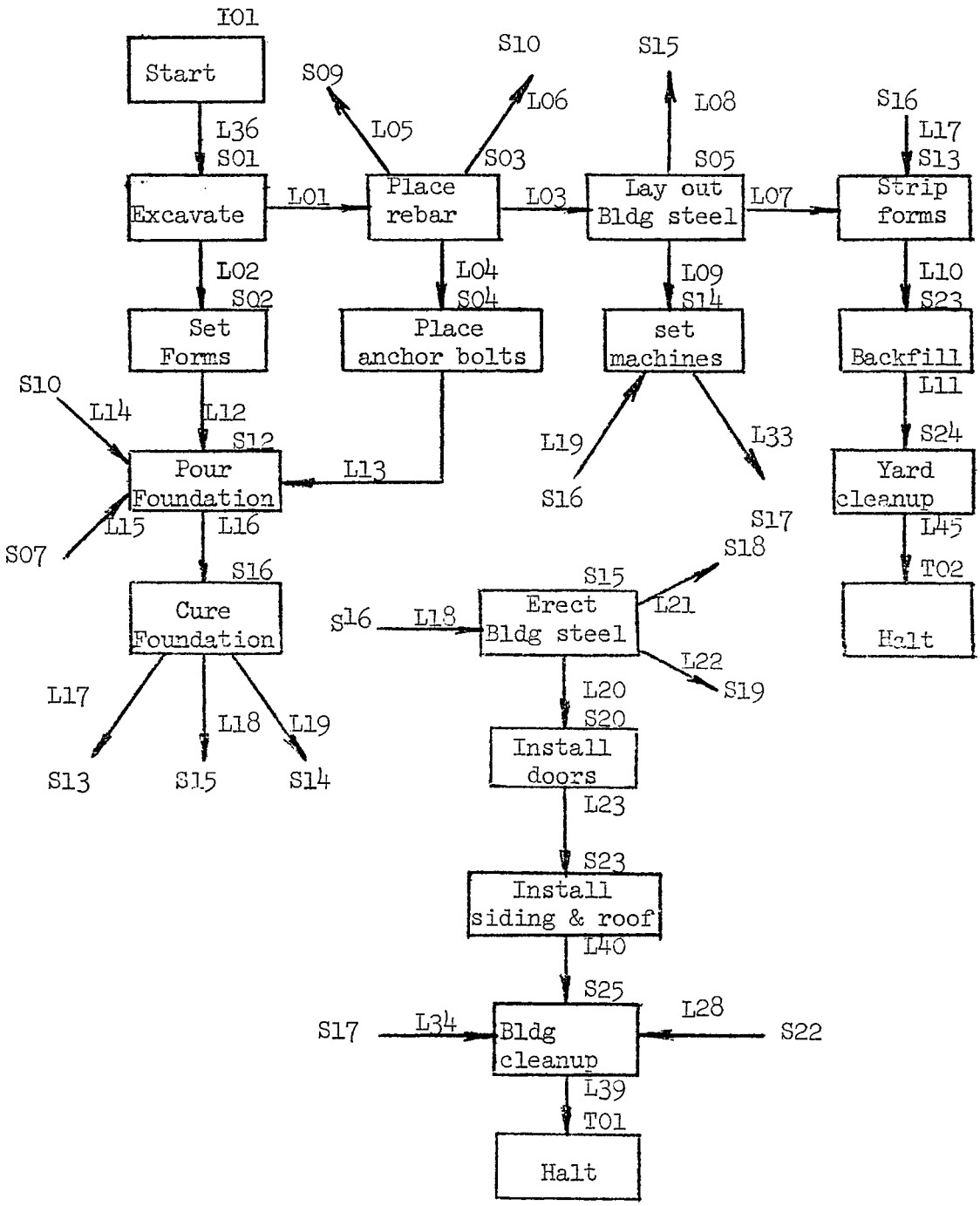

Figure 3.3.1 Structural block of the formal system representation, $\mathcal{G}$, of the critical path diagram for the subsystem approach.

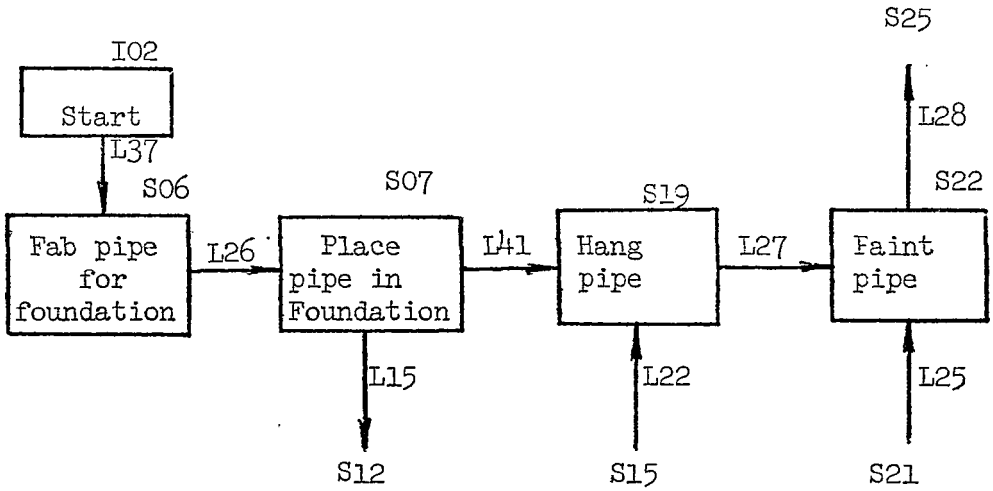

Figure 3.3.2 Piping block of the formal representation, $\mathcal{S}$, for the subsystem approach.

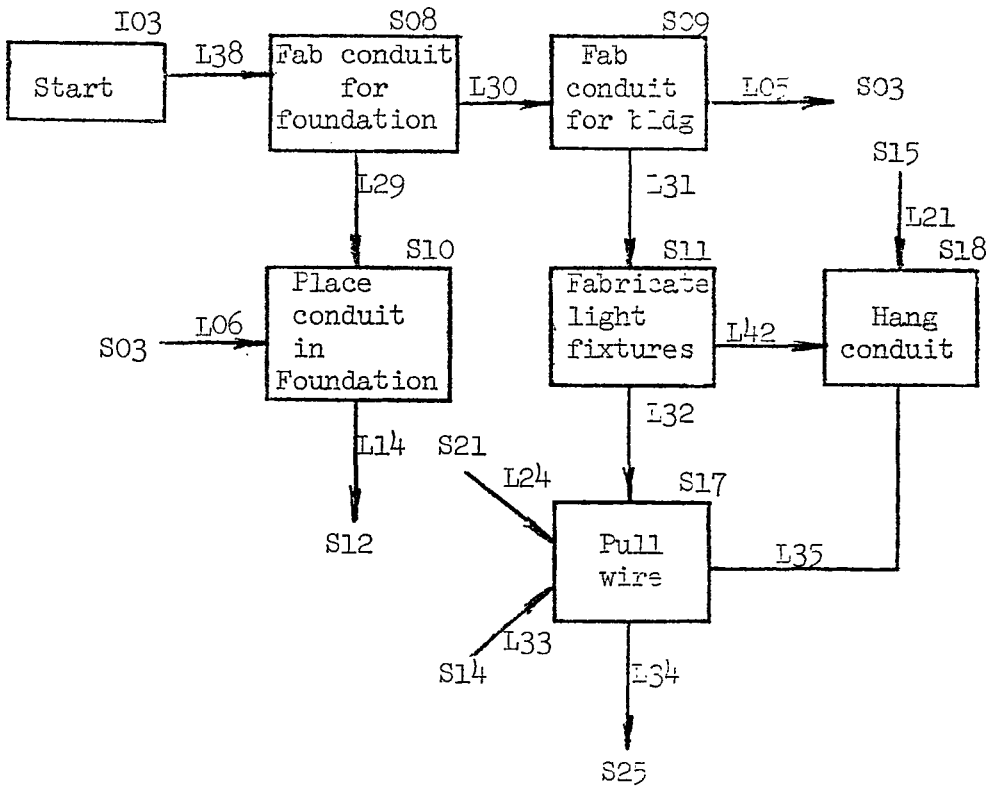

Figure 3.3.3 Electrical block of the formal representation, $\mathcal{S}$, for the subsystem approach.

is not dependent on the next step in the construction sequence. In addition to adding an initial step in each block (I01, I02, and I03 in Figure 3.3), a terminal step, T01, has been added, following "building cleanup" (S25), to allow this activity to continue for 4 time units (the duration of "building cleanup" and the transition time of L39) and then halt. A similar situation exists after "yard cleanup" (S24) where a terminal step, T02 was added.

3.4 Model Representation, $\mathcal{M}$

3.4.1 Direct Map Approach

The system conceptualization shown in Figure 3.2 maps directly into the SS-graph of Figure 3.4. This figure represents one subsystem, CPM, just as the system, $\mathcal{S}$, was conceptualized to consist of one block. Subsystem CPM is specified to have "function level = 1", which allows multiplicity of activity, and a cycle time of unity. The initial system state, I01, whose emanating transition L01 consumes zero time, corresponds directly to the "start" step. All system states which correspond to steps in the actual system (S01 through S18) are assigned a priority level of 2. Three system states have been added, however, which lack corresponding steps in $\mathcal{S}$. They are I02, an initial system state, X02, and T02. System states X02 and T02, are assigned priority level = 1. (Initial system states are always assigned priority level = 0 by definition in the current model implementation). The additional system states are used to invoke a transformation, upon completion of L31, which will find the critical path through the SS-graph representing $\mathcal{M}$. This will be explained in Section 3.5.1. All system states have AND input logic and all transition conditions (which may be thought of as a step's output logic) are T E.

Figure 3.4 Legend

Subsystem	Cycle Time	Function Level
CPM	1	Multiplicity of Activity

System State	Priority	Input Logic
I01	0	.
I02	0	.
X02	1	.
T02	1	.
All Others	2	.

Transitions	Condition	Time	Transformation
L01	TRUE	0	
L30	TRUE	0	
L31	TRUE	1	Terminate model cycling and find critical path
L27	TRUE	3	
L28	TRUE	7	
L29	TRUE	7	
All Others	TRUE	Correspond to links in Fig. 3.1	

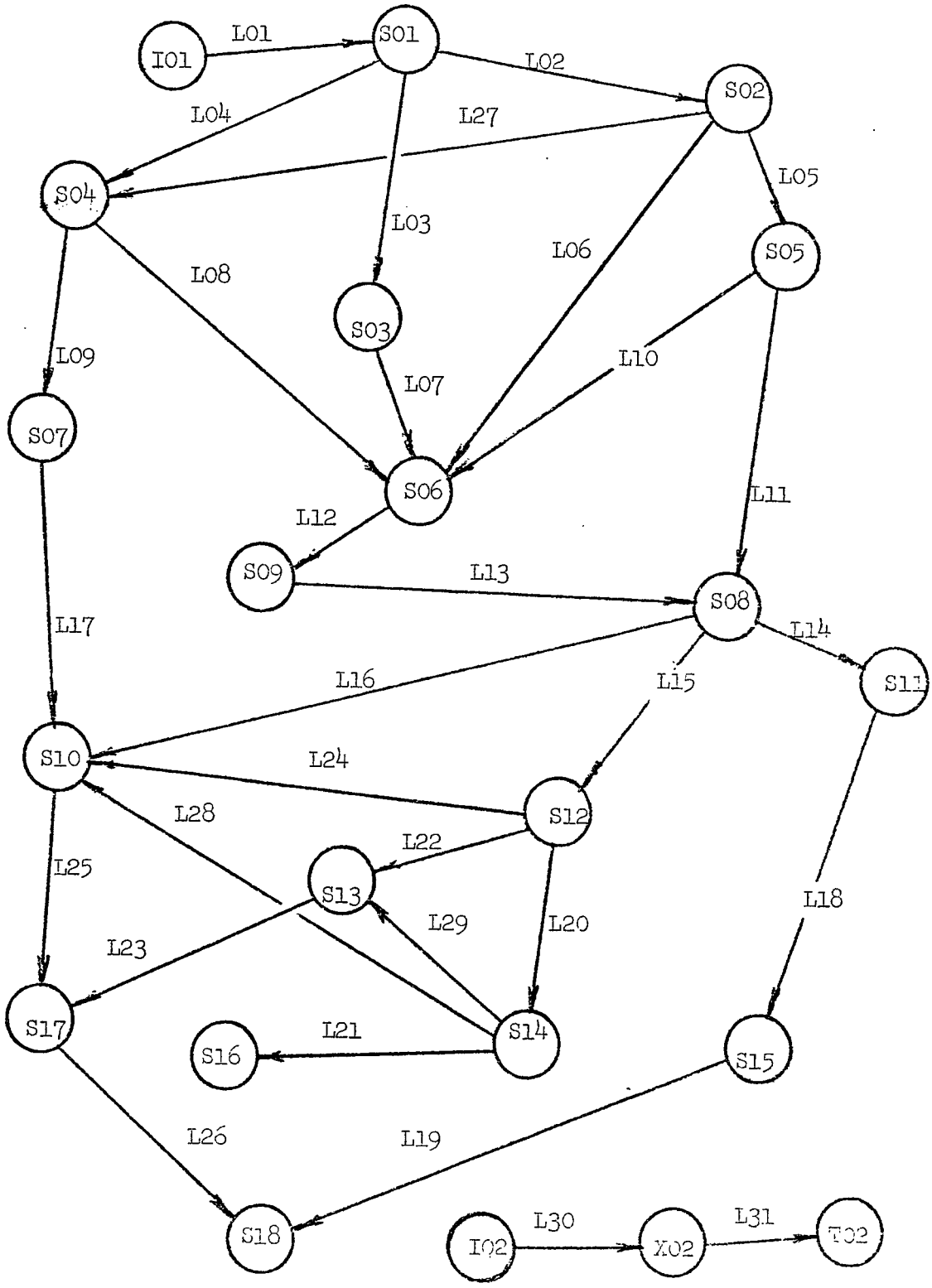

Figure 3.4 Model representation, $\mathcal{M}$, of the system $\mathcal{S}$ shown in Figure 3.2.

3.4.2 Subsystem Approach

The SS-graph representing $\mathcal{M}$, shown in Figure 3.5 is a direct transformation of $\mathcal{S}$ as shown in Figure 3.3. The three separate blocks now become the three subsystems STRU, ELEC, and PIPE. Each subsystem is specified to allow multiplicity of activity and to have unity cycle time. All system states have AND input logic and all transition conditions (which may be thought of as a step's output logic) are TRUE. All system states representing steps in $\mathcal{S}$, (tasks in the original system) are assigned priority level = 2. Three system states I04, X04, and T04 have been added in subsystem STRU. Their role, analogous to the three additional system states in the "direct map approach", is to simply invoke a transformation, upon the completion lf L44, which will find the critical path.

3.5 Dynamic Model

3.5.1 Direct Map Approach

The program listing and output is shown in Appendix D. The output shows that system state S-18 became active at time = 39. This system state corresponded to step S-18 in $\mathcal{S}$, the last step in the project. Since it had no emanating transition it immediately (still at time = 39) went to "input wait". This means the project would have ended after 39 time units (days). At time = 39, as S-18 goes to "input wait", one of the "additional" system states, X02 becomes active. Its emanating transition, L31, completes at time = 40 and a transformation is invoked which finds the critical path, and terminates model cycling.

The method of handling model termination will first be described. Recall that for the Turing Machine Model, (see section 2.5) a quantity of cycles was specified on the termination order ("T" card in input stream) which was large enough to be on the "safe side" and assure

Figure 3.5 Legend

Subsystem	Cycle Time	Function Level
STRU, PIPE, ELEC	1	Multiplicity of Activity

System State	Priority	Input Logic
I01	0	.
I02	0	.
I03	0	.
I04	0	.
X04	1	.
T04	1	.
All Others	2	.

Transitions	Condition	Time	Transformation
L36	TRUE	0	
L37	TRUE	0	
L38	TRUE	0	
L43	TRUE	0	
L44	TRUE	1	Terminate model cycling and find critical path
All Others	TRUE	Time of task corresponding to parent system state	

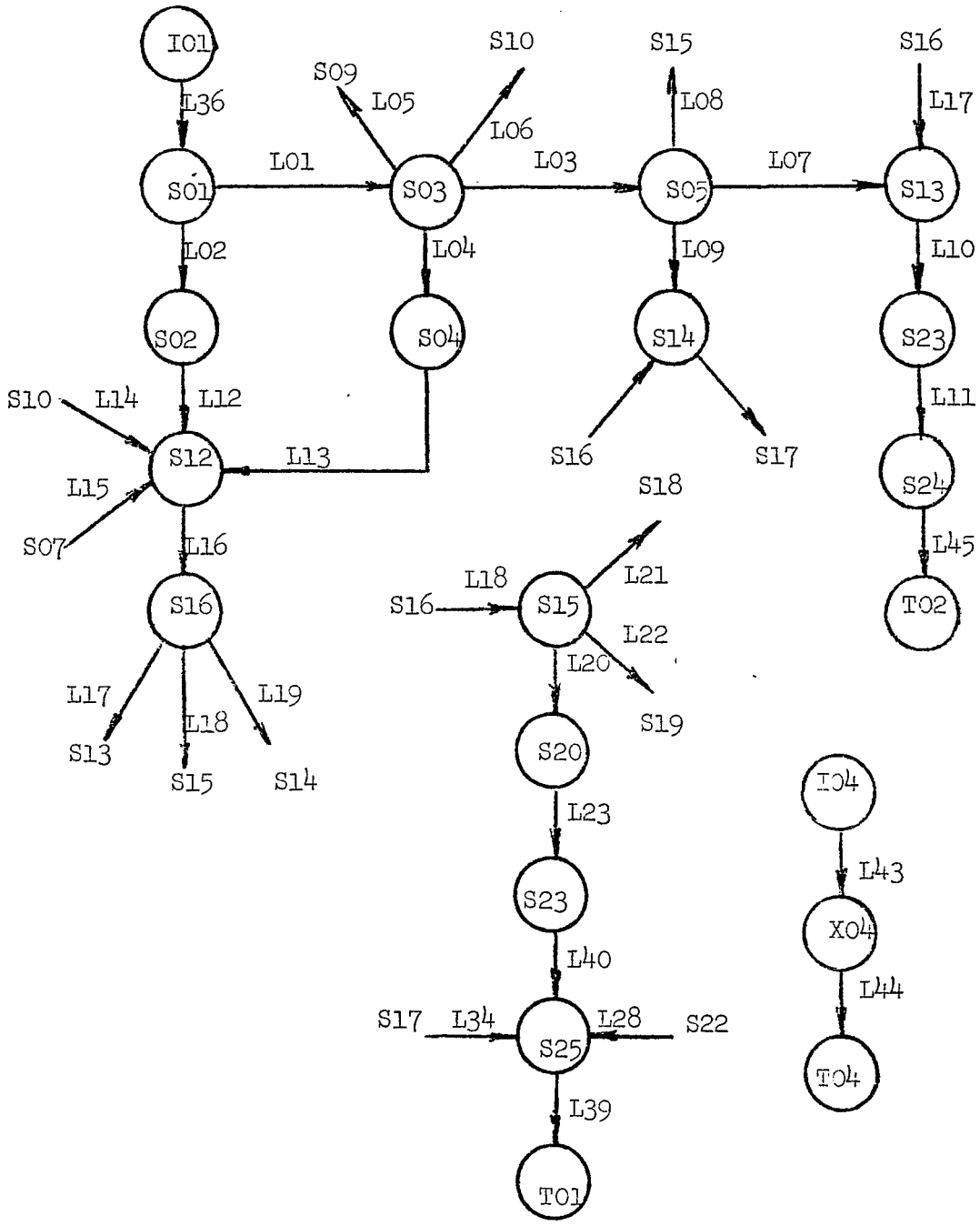

Figure 3.5.1 Subsystem STRU of model representation $\mathcal{M}$

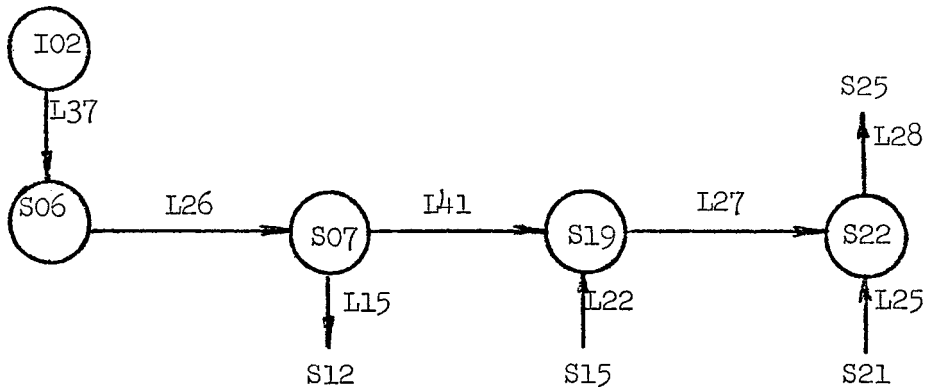

Figure 3.5.2 Subsystem PIPE of model representation, $\mathcal{M}$

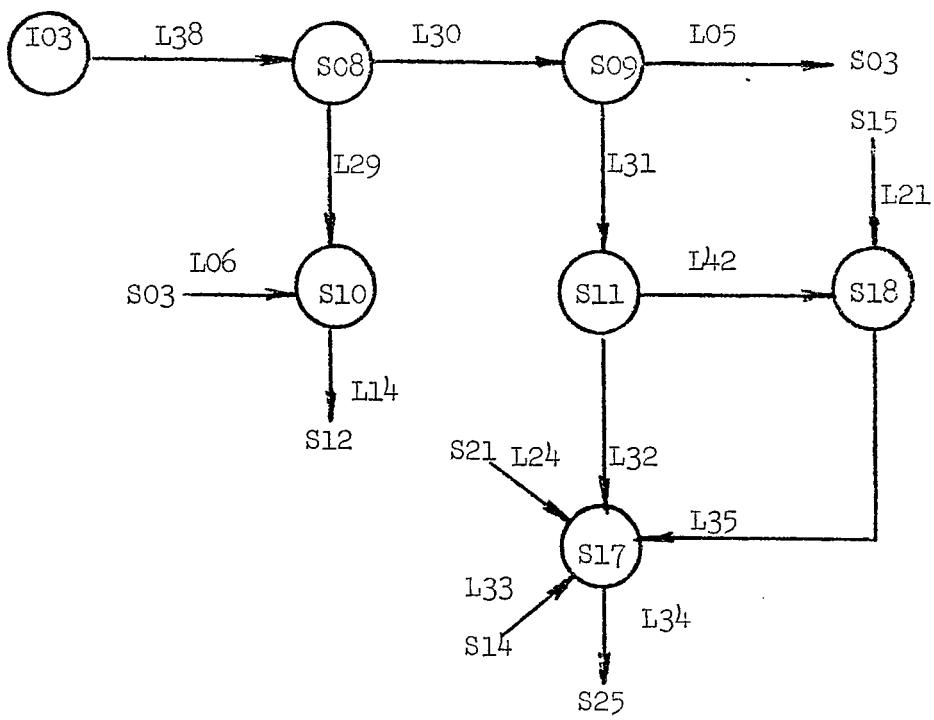

Figure 3.5.3 Subsystem ELEC of model representation, $\mathcal{M}$

completion of the Turing machine operation. As was pointed out in 2.5 this is wasteful and awkward. The additional system states I02, X02, and T02 are used to solve the termination problem as follows: At time = 0, I01 and I02 (Figure 3.4) both become active and their emanating transitions, L01 and L30 each complete, still at time zero. At this point the exclusive priority level feature of the system state model comes into play and the following occurs: Since the system states which correspond to steps in $\mathcal{S}$ (S01 through S18) were at priority level = 2 and the additional system states (X02 and T02) were at priority level = 1, the activity of S01 will take precedence over that of X02. Therefore, X02 will be held in "priority wait" while S01 becomes active. Of course, as soon as one of the transitions emanating from S01 completes, say L02, another system state S03, also at priority level = 2, becomes active. Its activity also precedes any activity at priority level = 1, holding X02 in "priority wait". This demonstrates the "multiplicity of activity" in this subsystem, as multiple system states at priority level 2 may be active simultaneously, and also demonstrates the exclusive priority level characteristic of the system state model, as priority level 1 activity at X02 remains in "priority wait". When subsystem activity at the higher level ceases, then the lower level system state X02 becomes active. Its emanating transition, which invokes the transformation of interest, completes, and the model run terminates.

The transformation which causes the run to terminate simply sets the value of the model variable "CT" which represents total desired model time to the current value of the model variable LCT(1) which represents current time in this subsystem. This solves the problem of model termination when an unknown number of cycles are to be executed.

Before termination of the run, however, the critical path is determined. The coding of the transformation of L31 which interrogates the data structure of the system state model is explained in terms of the activity dump shown in Figure 3.6. Starting at the end of the dump (time = 40) one moves backward until a priority level 2 system state is found active. Such a system state is found at time = 39, where S18 is active. This, S18, is the last system state on the critical path. The system states which are listed at time = 39, are then searched for one in "input wait". One is found, namely S17. The reasoning here is simply that, along the critical path, as soon as a transition completes, its parent system state goes to "input wait" (or "residual active" shown as "(A)" in the activity dump, if the parent system state has other emanating transition(s) which have not yet completed), and at that instant the next system state becomes active. In other words, there is no slack time on the critical path. The critical path is now being traversed backwards, so we look for an active system state and its predecessor, which at the same time must have changed to "input wait" (or "residual active"). Reference is again made to the status activity dump at time = 39, only S17 was in "input wait", therefore it preceeds S18 on the critical path. The dump is now searched backward until S17 is found active. This is found to occur at time = 35. The system states listed at time = 35 are then searched for one in input wait and S10 is found. The dump is then searched backwards until S10 is found active. This occurs at time = 30. The other system states listed at time = 30 are then searched for one in input wait. This time, two are found, namely S16 and S14. Reference is then made to the portion of the system state model data structure which stores the directed SS-graph. This results in finding S14 linked to S10. Therefore S14 is selected as being on the critical path. The dump is then searched backwards until S14 is found

TIME	SUBSYSTEM SYMBOL	RHO	SYSTEM-STATE SYMBOL	ETA	MU (Priority)	STATUS	TRANSITIONS SYMBOL	KAPPA	TAU	R
							L14	14	2	2
							L15	15	5	5
							L16	16	4	4
15	CPM	1	S08	9	2	(A)				
							L14	14	2	0
							L15	15	5	3
							L16	16	4	2
			S11	12		PW				
			S11	12		A				
							L18	18	1	1
16	CPM	1	S11	12	2	IW				
			S15	16		PW				
			S15	16		A				
							L19	19	3	3
17	CPM	1	S08	9	2	(A)				
							L15	15	5	1
							L16	16	4	0
18	CPM	1	S03	9	2	IW				
			S12	13		PW				
			S12	13		A				
							L20	20	5	5
							L22	22	6	6
							L24	24	7	7
19	CPM	1	S15	16	2	IW				
23	CPM	1	S12	13	2	(A)				
							L20	20	5	0
							L22	22	5	1
							L24	24	7	2
			S14	15		PW				
			S14	15		A				
							L21	21	7	7
							L23	23	7	7
							L29	29	7	7
24	CPM	1	S12	13	2	(A)				
							L22	22	6	0
							L24	24	7	1
25	CPM	1	S12	13	2	IW				
30	CPM	1	S14	15	2	IW				
			S16	17		PW				
			S13	14		PW				
			S10	11		PW				
			S16	17		A				
			S16	17		IW				
			S13	14		A				
							L23	23	2	2
			S10	11		A				
							L25	25	5	5
32	CPM	1	S13	14	2	IW				
35	CPM	1	S10	11	2	IW				
			S17	18		PW				
			S17	18		A				
							L26	26	4	4
39	CPM	1	S17	18	2	IW				
			S18	19		PW				
			S18	19		A				
			S18	19		IW				
			X02	21	1	A				
							L31	31	1	1
40	CPM	1	X02	21	1	IW				
			T02	20		PW				
			T02	20		A				
			T02	20		IW				

*** END OF MODEL CYCLING ***

Figure 3.6 The "backward trace" of the critical path

active at time = 23. Remaining system states listed at time = 23 are searched, looking for one in input wait. None are found, however, S12 is found "residual active" ("(A)") so it is next on the critical path. The search is continued until the starting system state is reached. The output lists the system states in reverse order as they were found by this search process.

3.5.2 Subsystem Approach

This listing and output is also shown in Appendix D. The entire modeling operation was analogous to that described in 3.5.1. The additional system states I04, X04, and T04 were placed in subsystem STRU because it was known that this subsystem contained the ending system state. Their role in terminating model cycling and invoking a transformation to find the critical path was the same as described in 3.5.1. There was a minor difference in coding, however. In the direct map approach, this transformation contained all the coding in line. In the subsystem approach, the transformation called a subroutine, OUTPUT, which found the critical path.

3.6 Example Results

The example demonstrates the use of alternative conceptual representations of a problem. There was less coding involved in the model representation for the direct map approach. This could be an important consideration in large problems. The tracing of the critical path was identical in both cases, however, so there was no relative advantage in that portion of the problem. The use of a subroutine in the subsystem approach and in line coding in the direct map approach was simply to show different methods which were equal in work and result.

3.7 General Conclusions

The system state model was found to be well suited for the critical path system analysis. It is evident from Figures 3.1, 3.2, and 3.4 that the transformation from critical path diagram to SS-graph is a straight forward process. The critical path diagram corresponds directly to the formal system representation, $\mathcal{S}$, as far as graphic representation is concerned. It should be noted, however, that it is the activities denoted by a node's emanating arrows in the critical path diagram which map to steps in $\mathcal{S}$. The sequencing of the activities denoted by the arrows in the critical path diagram map to links in $\mathcal{S}$. The transformation is conceptually just as straight forward in the case of the subsystem approach. The formal critical path construct is a subset of the system state model construct. This would allow anyone who is already trained to think in terms of the critical path diagram of Figure 3.1 to easily formulate his problem in terms of the direct map approach. The system state model solution for this approach offered the distinct advantage of not requiring the user to know before hand which task would be the final one. The subsystem approach put a slight constraint on the user by requiring him to know in which subsystem the final task would occur. The subsystem approach could possibly be advantageous on large projects in which a particular foreman (or subcontractor) would prepare a diagram corresponding to Figure 3.3.1, for example, and a general foreman (or general contractor) would add the links which connect steps in different blocks.

The system state model could be a useful teaching aid in courses dealing with critical path concepts. The required subset of system state model parameters could quickly be learned, and students could employ the model in analyzing projects. The utility of the model would be improved

for this purpose if the logic which finds the critical path (which was coded in Subroutine Output) was included as a part of the model and could be accessed by the student simply by a subroutine call. The existing logic would only find one critical path. Additional logic would be required to discover portions to the project containing multiple paths in the remote instances that this condition existed.

In order to function as a practical critical path tool, supplemental logic should be added which would determine the slack time for each task. This logic would involve comparing the total cumulative time associated with each arrow entering a node in the critical path diagram. For example, there are four arrows entering node 6 (Figure 3.1). They are arrows 5-6, 2-6, 3-6, and 4-6. The cumulative times to reach node 6 via these arrows are 8, 6, 4, and 9 respectively. The greatest time corresponds to arrow 4-6, and indicates that it is the arrow which places the limiting constraint on "entering" node 6. The difference between this limiting constraint and the cumulative times associated with the other arrows yields the slack time associated with tasks which those arrows represent. In this example the slack for arrows 5-6, 2-6, and 3-6 would be 1, 3, and 5 respectively. The system state model construct would readily support the incorporation of this logic. Suitable output could then be added which would present the slack times in a convenient format.

4. HUMAN-MACHINE INTERACTION

4.1 Introduction

In many physical situations, the role of a human is so important that it justifies explicit representation in the model or simulation. Although knowledge of human performance is a severe limitation in this type of modeling, there are some problems in which the human's role can adequately be represented. Human performance in a manufacturing plant, for example, might be the focal point of the "time and motion studies" of the industrial engineer attempting to maximize human-machine performance. On a more macroscopic level, the gross output of personnel may be modeled simply to determine when to add or withdraw workers from a project. The approach in this example will be to use a macroscopic analysis of the human's overall performance followed by a microscopic analysis of a portion of his performance.

4.2 Example System

This example will model the activities of a human operator as he goes through the start up procedure for a hypothetical gas compressor plant. The plant will consist of several similar but not identical engines, each with its associated oil, water, and safety shut-down subsystems. The engines are started from a starting air system which supplies the entire plant. The operator will attempt to start, idle, and load each unit as quickly as possible and do so in a manner which will load the entire plant as quickly as possible. The machine portion of this example is shown schematically in Figure 4.1. The human's operating procedure is outlined in Figure 4.2. The system will first be presented at a general level equivalent to Figure 4.1 and Figure 4.2. A typical unit will then be modeled in detail, including its auxiliary

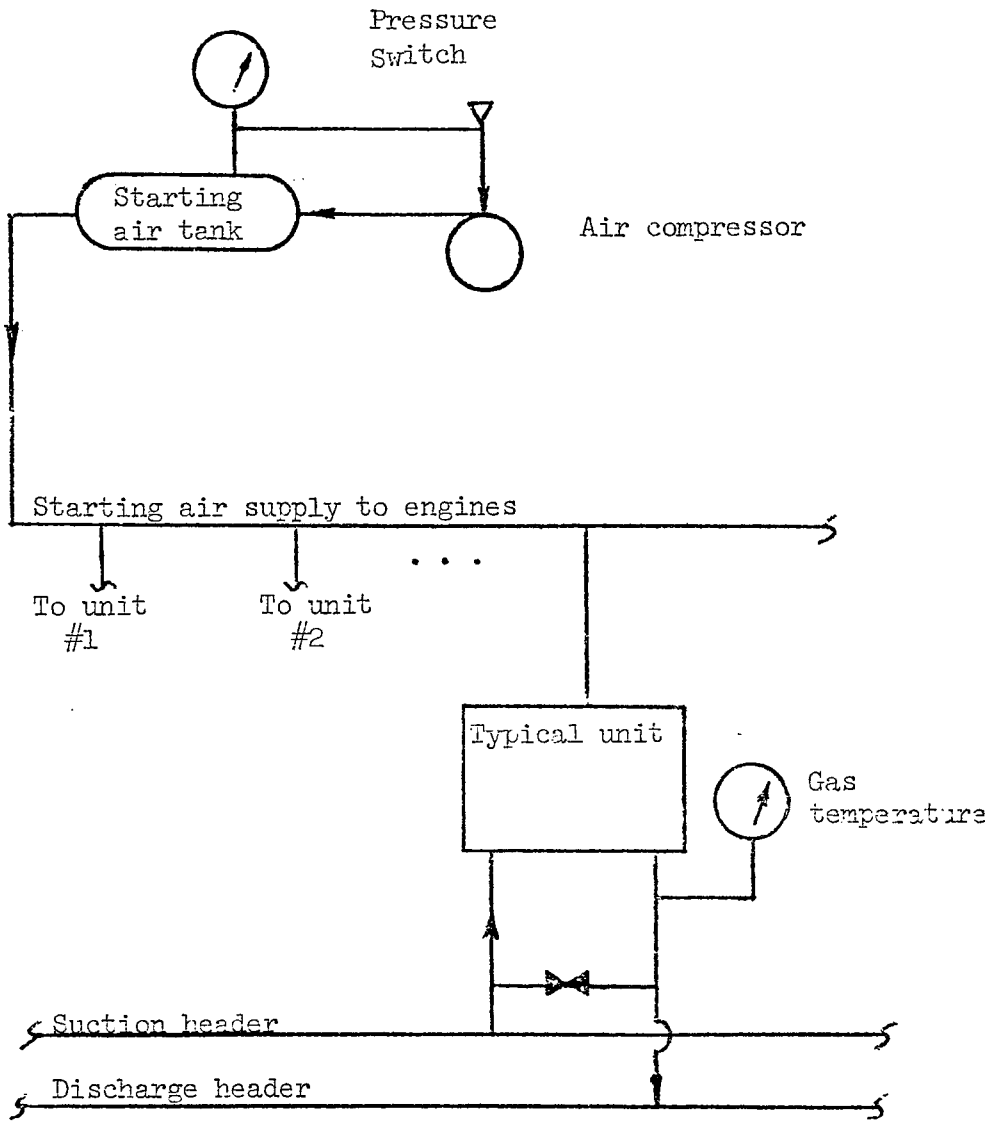

Figure 4.1 Machine Portion of "Human-Machine Interaction."

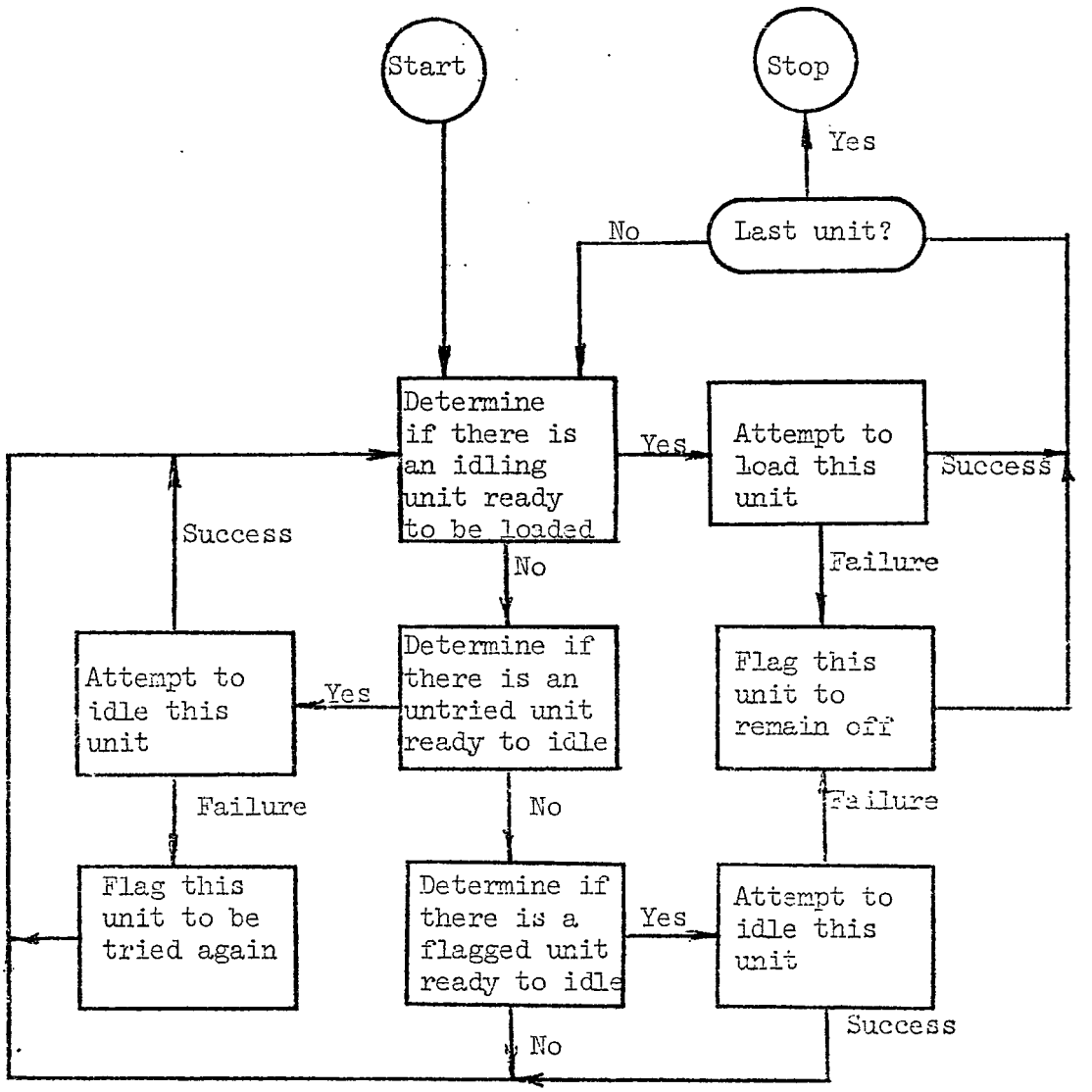

Figure 4.2 Operator's Procedure for "Human-Machine Interaction."

oil, water, and safety shutdown systems. The operator will then be modeled as he interacts with the unit at the detailed level.

The macroscopic approach deals with studying the adequacy of the starting air system. The system is adequate if its recovery rate is sufficient to always maintain adequate pressure to "try another start". In other words, the operator should never have to wait for air pressure to build up, assuming it is at the maximum allowable value when he enters the plant. Total time to load the plant under ideal conditions is also of interest. Therefore, probabilities of ignition failure, temperature shutdowns and other realistic, but "non ideal" circumstances are assumed to be zero. Engines are modeled deterministically based on proper response at each step. This approach is intended to model the best time in which the operator can load the plant under favorable circumstances.

The microscopic approach will include the probability of success at each step in the human-machine interaction, and will include the operator's response to various unit perturbations as well as the unit response to operator absence.

4.3 Formal System, $\mathcal{S}$

4.3.1 Macroscopic Approach

The system is conceptualized to consist of seven blocks. Since five of the blocks represent five similar units, the graphic representation of steps and links shown in Figure 4.3.2 is typical for all of them. Minor dissimilarities such as differences in required idle time or rate of starting air consumption can easily be visualized and accounted for in model coding by referring to the one "typical" block layout. The other blocks are the starting air system and the human operator.

Figure 4.3 Legend

Blocks:	Starting Air Operation Unit No. 1 Unit No. 2 Unit No. 3 Unit No. 4 Unit No. 5	Unity cycle time, multiplicity of activity
Steps:	I01	Initiate activity, priority = 0
	I02	Initiate activity, priority = 0
	U105	Priority = 2
	U106	Priority = 3
	All Others	Priority = 1
	All Steps	EXCLUSIVE OR input logic
Links:	All Links	Time: deterministic, expressed in tenths of minutes (see Figure 4.5 Legend). Transition conditions: allow optimum system performance Transformations: record effect(s) of step(s) completion.

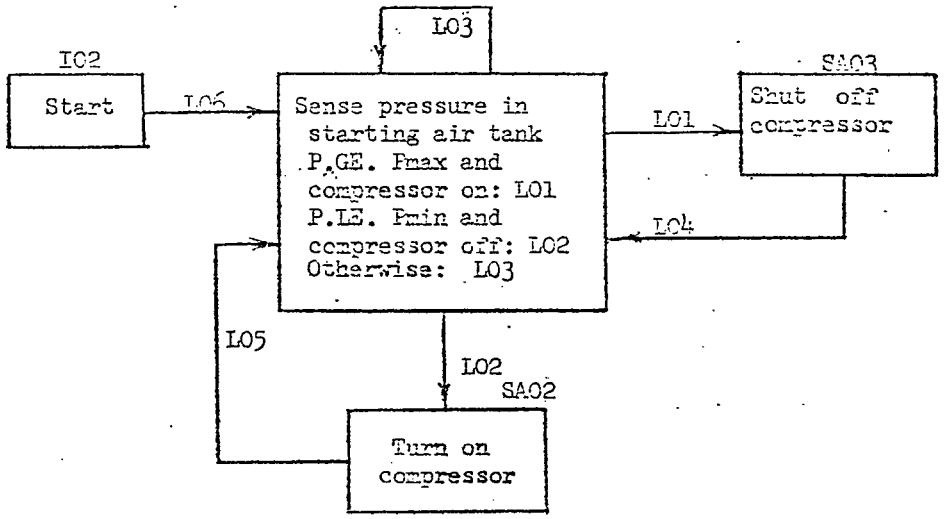

Figure 4.3.1. Starting air block of the formal system, $\mathcal{S}$, of the Human-Machine Interaction

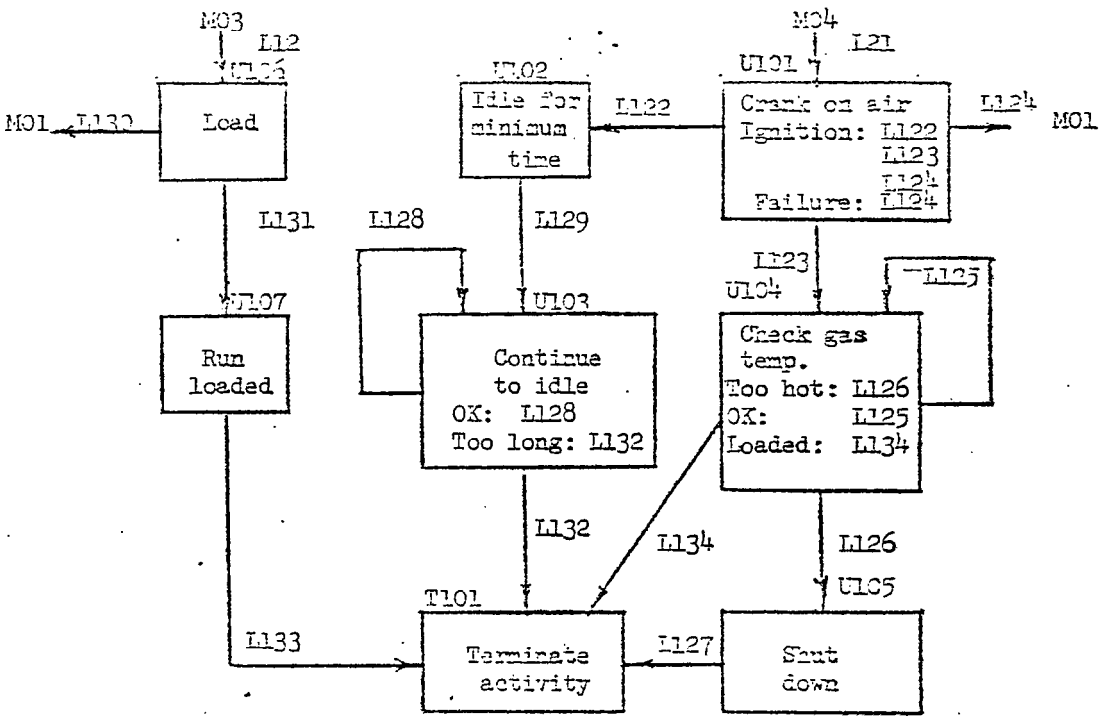

Figure 4.3.2. Unit No. 1 Block (Typical) of the system, $\mathcal{S}$, for macroscopic approach

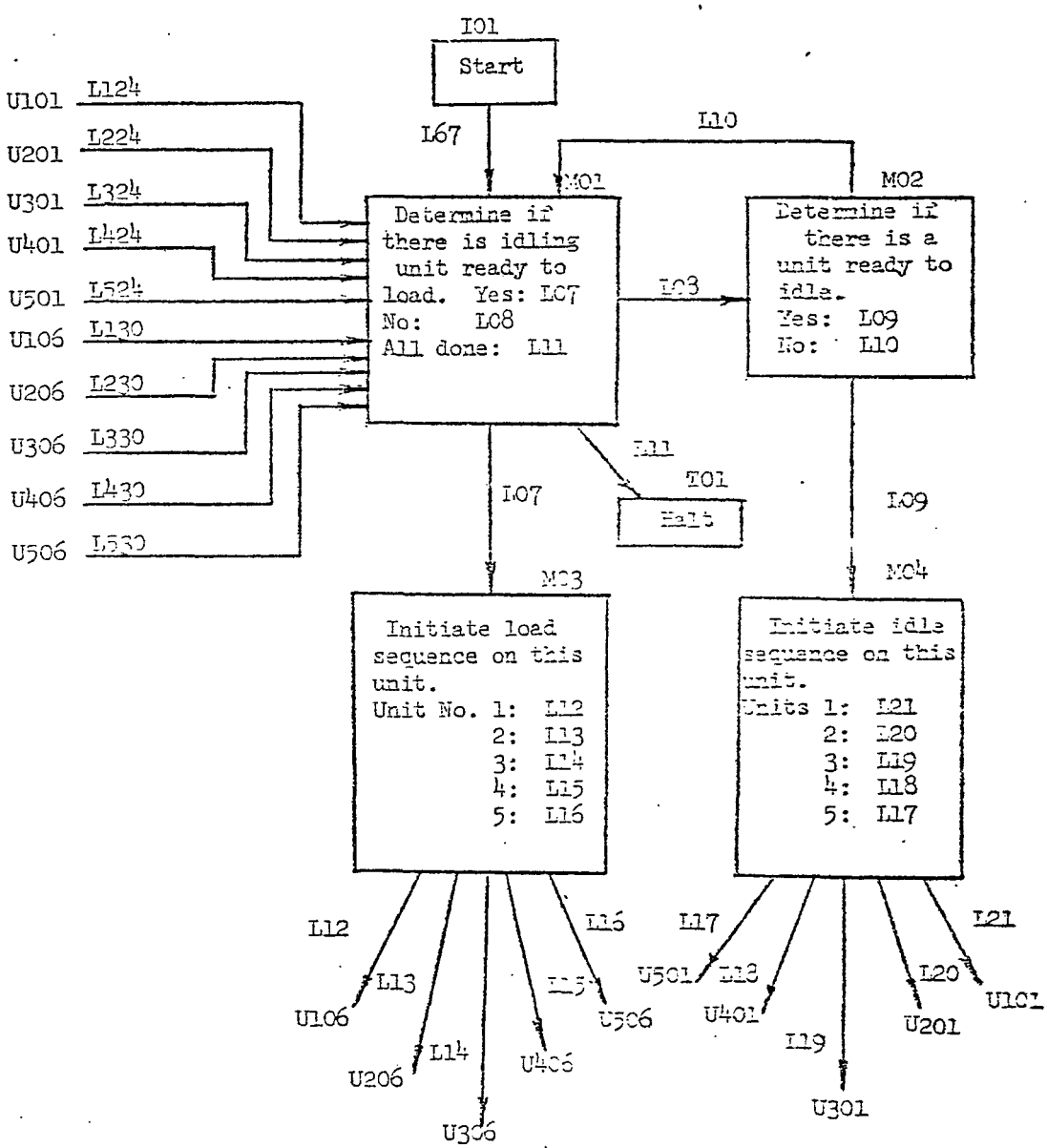

Figure 4.3.3. Operator block of the system, $\mathcal{S}$, for macroscopic approach

The starting air (SA) system, shown in Figure 4.3.1, represents simply an air storage tank fed by an air compressor. The air compressor is started and stopped by a pressure switch on the tank. It is assumed that there are no leaks in the starting air system, so that the pressure will decrease only when the operator attempts to start a unit. The starting air system supplies five gas compressor engines through a common header.

There are five unit blocks, each similar to the Unit No. 1 block shown in Figure 4.3.2. The graphic representations of units 2 through 5 would be identical to Figure 4.3.2, except that steps and links would be numbered in the 100's, 200's 300's etc. For example, a step labeled U506 would correspond to "load" unit 5, and a link labeled L430 would connect the "load" step of unit 4 to the operator step labeled M01 in Figure 4.3.3. This procedure of representing similar entities, in this case the compressor engines, with identical step and link orientation facilitates coding of the model representation. Of course, differences in the five units are still incorporated in the ultimate model representation. For example, the step U102, "idle for minimum time", might consume 3 minutes for Unit 1 and 4 minutes for Unit 2. Therefore link L129 would have transition time = 3 and Link L229 (the corresponding link in the Unit 2 block) would have transition time = 4. Other difference might be reflected in the transformations. For example the rate at which starting air pressure is reduced during the "crank on air" step might vary among the units. This could be accounted for in the transformation logic of one of that step's emanating transitions. There is an implied precedence among the steps in each unit block, namely if gas temperature becomes too high and step U105, "shutdown" is entered at the same time step U106, "load", is

entered, the "load" step is to prevail.

4.3.2 Microscopic Approach

The system is now conceptualized as follows:

(1) There is a starting air system represented by the block shown in Figure 4.3.1 and explained in Section 4.3.1 (1).

(2) There is one unit, represented by the block shown in Figure 4.4.2.

(3) The activity of the operator, in regard to this unit, is represented by the block shown in Figure 4.4.1.

4.4 Model Representation, $\mathcal{M}$

4.4.1 Macroscopic Approach

The SS-graph of the model representation for this approach is shown in Figure 4.5. This representation is direct transformation of the formal system, $\mathcal{S}$, of Figure 4.3. The three subsystems shown (and the other four unit subsystems not shown) are all specified to be "hardware", i.e. to allow multiplicity of activity. All subsystems have unity cycle time. Priority among steps exists only in the unit subsystems. Refer, for example, to Figures 4.3.2 and 4.5.2 in which system state U105, corresponding to "shut down" is assigned priority 2, so that if it is entered, it will interrupt either system state U102 or U103 which represent idling steps. If, however, the operator returns to load this unit, as evidenced by system state U106 (the "load" step) becoming active, this will take precedence over all system states in the subsystem, including U105. In effect we are saying that if temperature shutdown would coincide with loading, the operator will override the shutdown since he knows [illegible] "loading, the temperature will [illegible]

Figure 4.4 Legend

Blocks:	Operator Unit	Unity cycle time, multiplicity of activity
Steps:	U11, M14 All others	AND input logic EXCLUSIVE OR input logic Uniform priority
Links:	L22, L04, L31, L32 All others	Transition times obtained from probability distributions Times deterministic per Figure 4.6 legend.
	L18, L17	Transition conditions based on 0.7 probability of successful ignition. Transformations record effect(s) of step(s) completion.

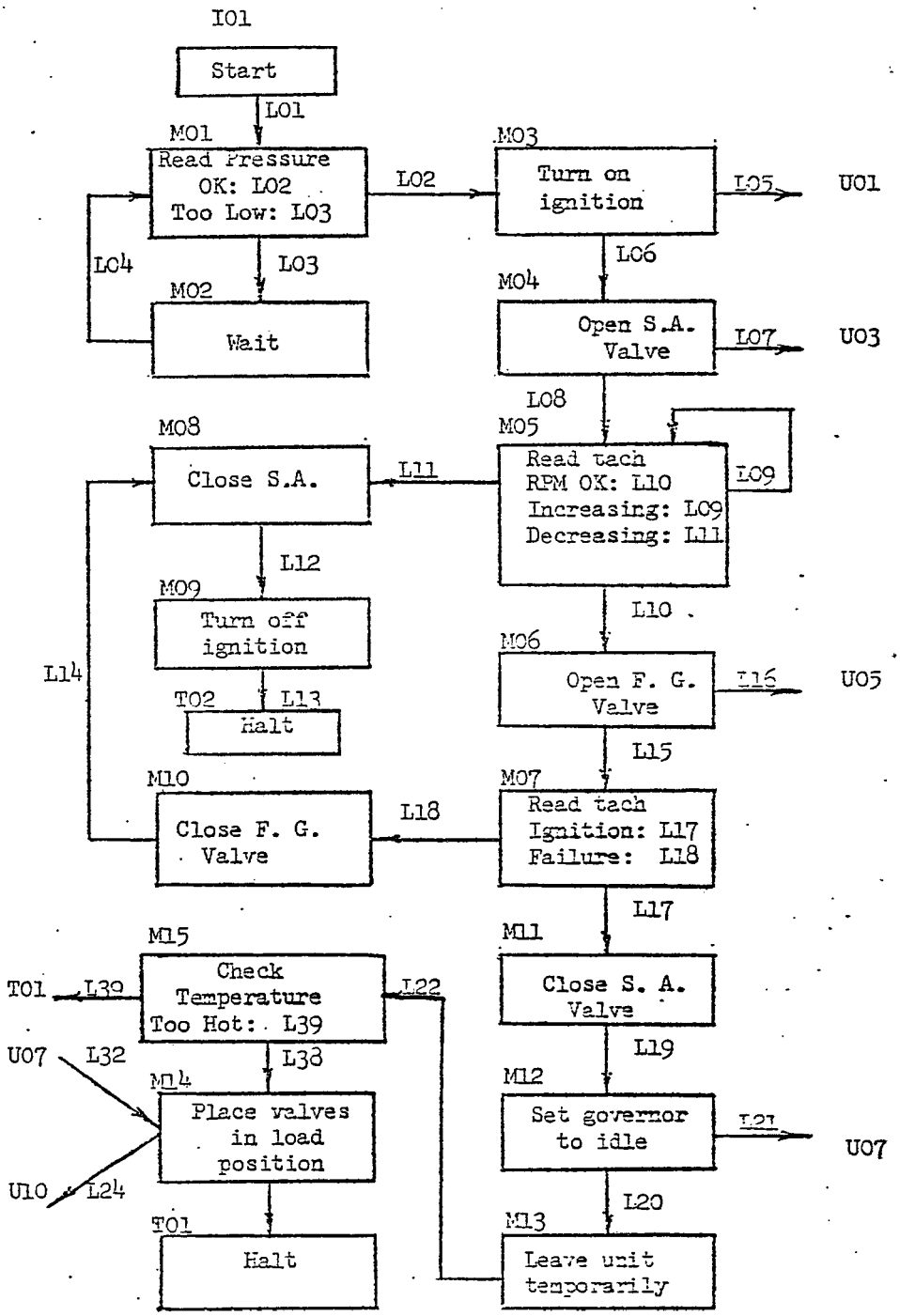

Figure 4.4.1 Operator block of the system, $\mathcal{A}$, for microscopic approach

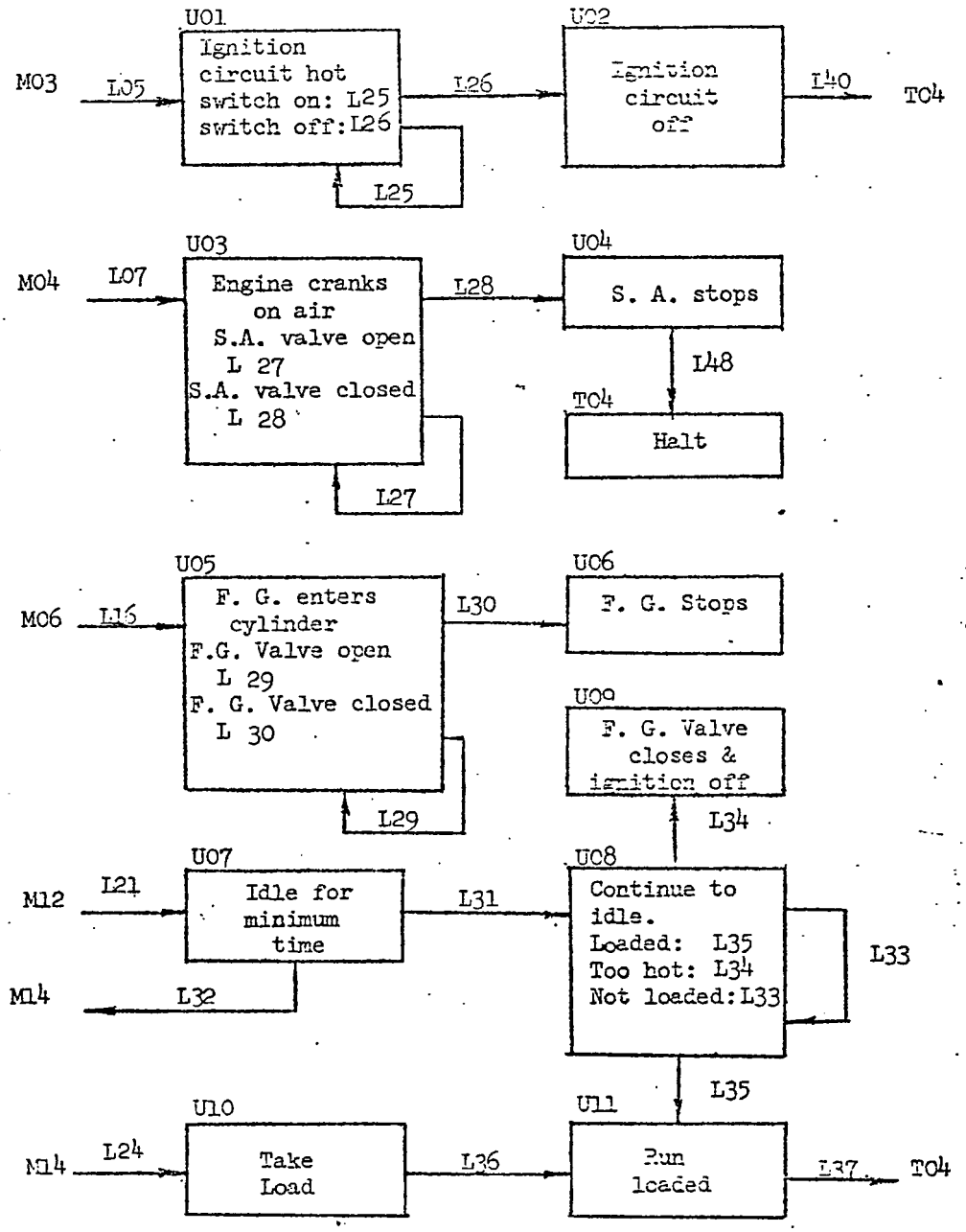

Figure 4.4.2. Unit block of the system, $\mathcal{S}$, for the microscopic approach

Figure 4.5 Legend

Subsystem	Cycle Time	Function Level
MAN, SA, U1	1	Multiplicity of Activity

System State	Priority	Input Logic
IC1, IC2	0	⊖
SA01, SA02, SA03	0	⊖
T01, U105	2	⊖
U106	3	⊕
All Others	1	⊖

Transition	Condition	Time	Transformation
L67	TRUE	0	
L21	Unit No. EQ. 1	20	Reflect engine cranking
L16	Unit No. EQ. 1	10	
L09	A unit is ready to idle	3	
L10	No unit to idle	3	
L07	A unit is ready to load	5	
L08	No unit is ready to load	5	
L11	All units loaded	5	Terminate simulation
L04	TRUE	1	Turn off compressor
L05	TRUE	1	Turn on compressor
L01	P.GE. P max and Comp on	1	Record pressure
L02	P.GE. P min and Comp off	1	Record pressure
L03	(Neither L01 nor L02 taken)	1	Record pressure
L130	TRUE	20	Record unit loaded
L131	TRUE	20	
L127	TRUE	5	Record temp shutdown
L133	TRUE	1	Terminate idle and temp sensing
L125	Idling and temp OK	5	Increment temp
L126	Temp too high	1	
L134	Temp too high	1	
L128	Idle time.LT. max allowable	10	Increment idle time
L132	Idled too long	1	
L129	TRUE	60	Record min. idle time completed
L122	Successful ignition	10	Unit stop taking air
L123	Successful ignition	10	
L124	TRUE	10	Record failure to fire

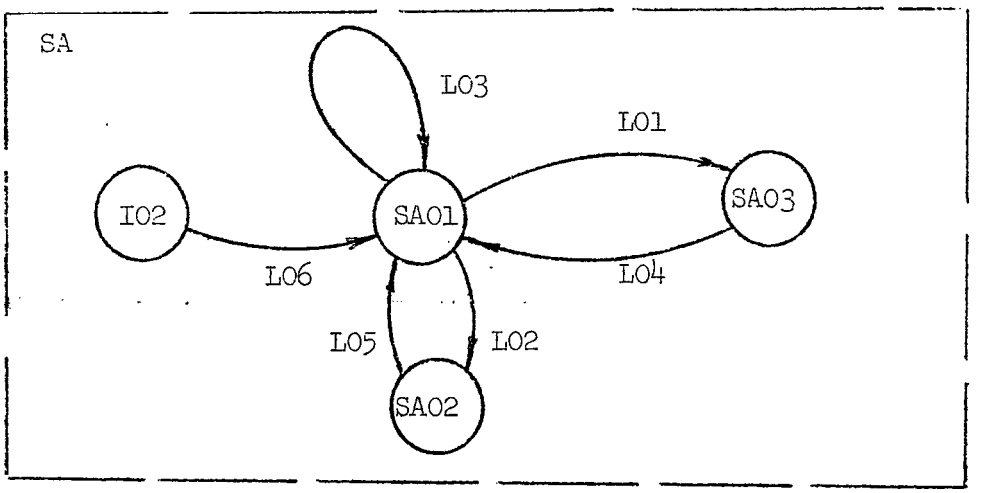

Figure 4.5.1. Model representation, $\mathcal{M}$, of the starting air subsystem

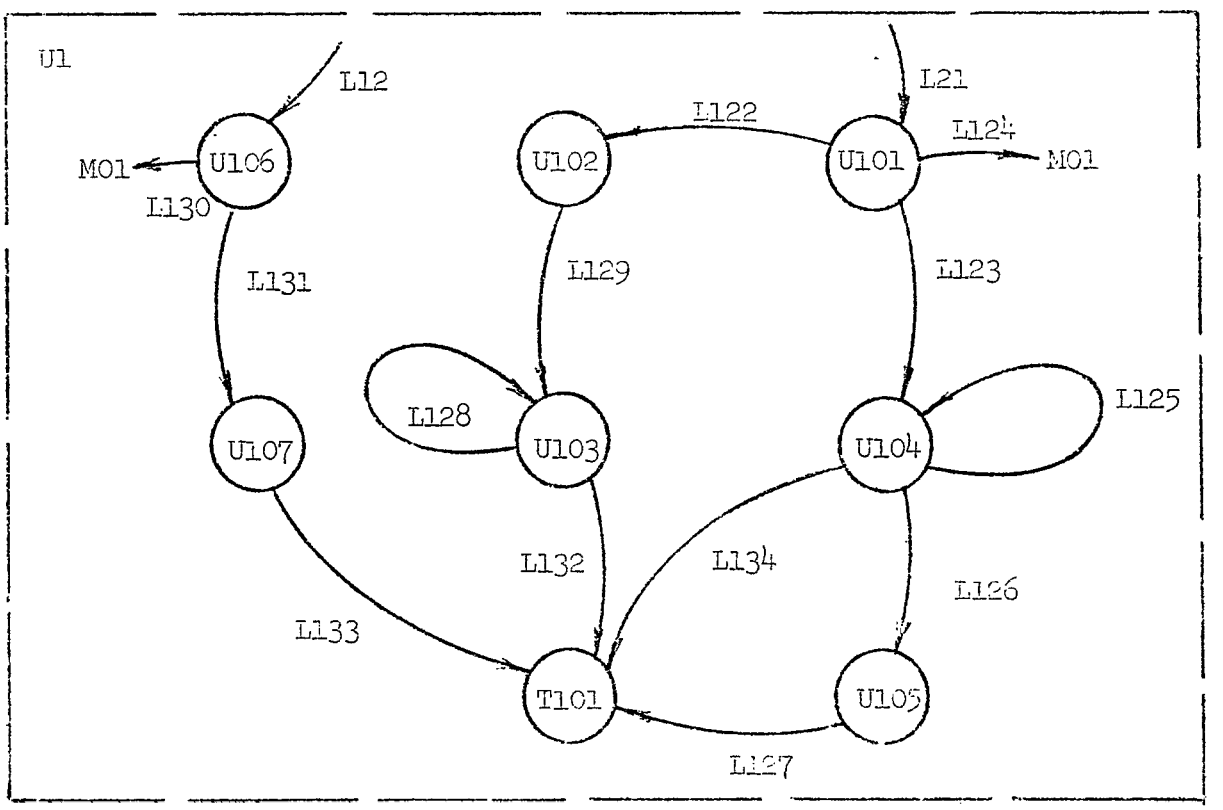

Figure 4.5.2. Model representation, $\mathcal{M}$, of the Unit No. 1 subsystem (typical) for the macroscopic approach

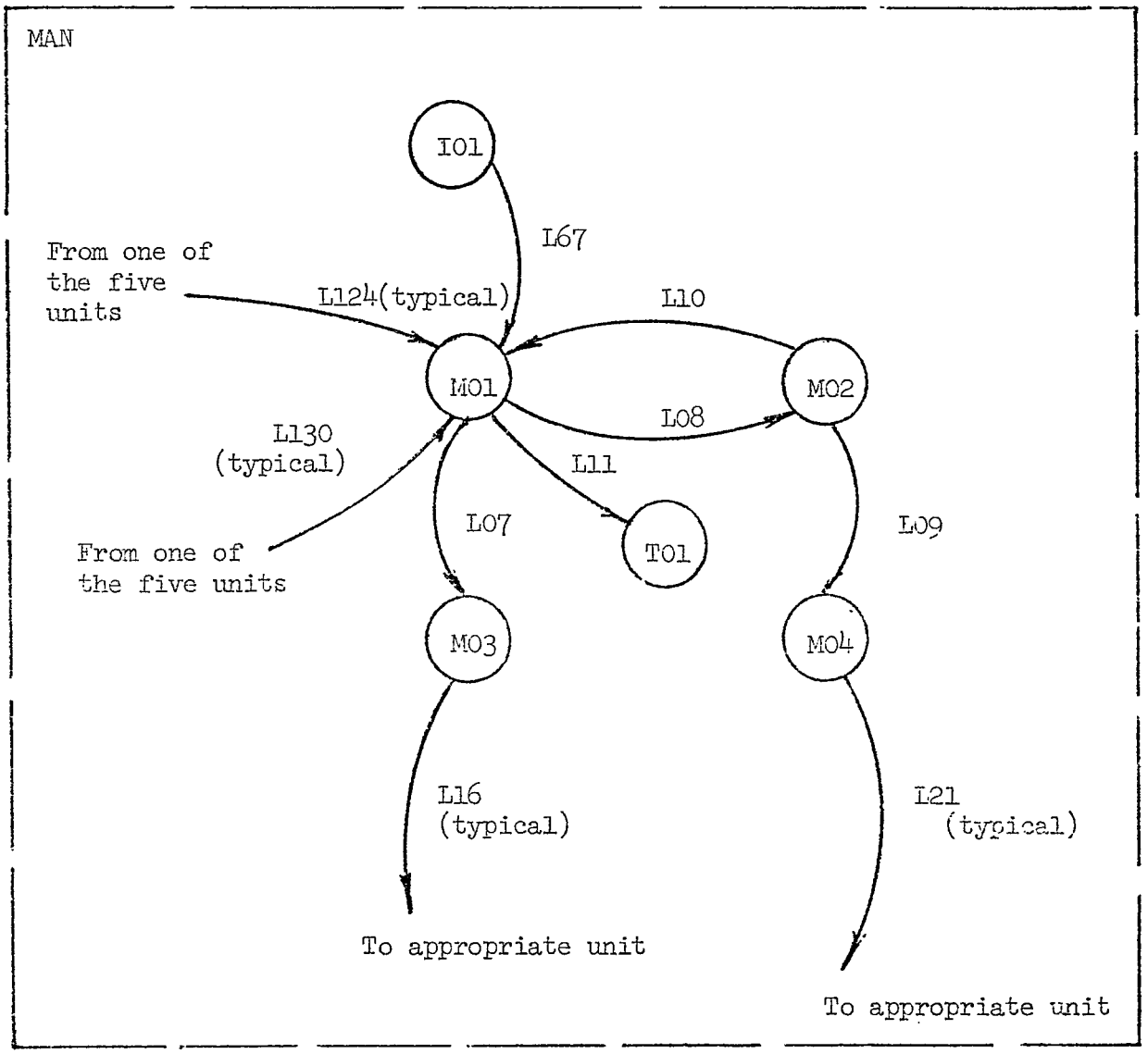

Figure 4.5.3. The operator subsystem, MAN, for the macroscopic approach

4.4.2 Microscopic Approach

The model representation, $\mathcal{M}$, for the operator and unit subsystems is shown in Figure 4.6. The starting air subsystem is identical to that shown in Figure 4.5.1 for the macroscopic approach. The model representation is substantially a direct transformation of $\mathcal{S}$ as shown in Figures 4.4.1 and 4.4.2 except for several system states and transitions which have been added. System states X01, X02, and X03 had no counterparts in . They simply function as gathering points for activity to facilitate the repeated modeling of start-up attempts. The system states corresponding to steps in are at priority level 2 and the additional system states are at priority level 1. (The additional ones are analogous to the "extra" system states in the Critical Path Model. Recall the explanation of Section 3.5.1.) System state X01 can become active only when all other activity in the U1 subsystem (at priority level 2) ceases. Since X01 and X02 both transition to X03, it will become active only when operator and unit are dormant. The emanating transition of X03 will then invoke a transformation which resets appropriate initial condition parameters and allows the simulation of another start. Note that the starting air subsystem, SA, continues to "run" during this process of quiesing and restarting the operator and the unit. Therefore the last value of starting air pressure on one simulation run will be the initial value of starting air pressure on the next run.

4.5 Dynamic Model

4.5.1. Macroscopic Approach

The dynamic behavior of the starting air subsystem, SA, simply involves updating the value of air pressure as a function of the elapsed time between updates, the rate of pressure increase which the compressor maintains, the

Figure 4.6 Legend

Subsystem	Cycle Time	Function Level
MAN, U1	1	Multiplicity of Activity

System State	Priority	Input Logic
I01	0	⊖
X01	1	⊖
X02, X03	1	·
M14, U11	2	·
All Others	2	⊖

Transition	Condition	Time	Transformation
L01	TRUE	0	Print leading
L51	TRUE	1	
L50	TRUE	1	Turn off ignition and F.G.
L38	Temp OK	1	
L39	Temp too high	1	Indicate operator found unit shut down
L23, L24	TRUE	1	Load unit
L22	TRUE	R.V.	Indicate operator absence
L20, L21	TRUE	1	Indicate set to idle
L19	TRUE	1	Indicate SA valve closed
L14	TRUE	1	Indicate FG valve closed
L13	TRUE	1	Indicate ignition off
L12	TRUE	2	Indicate SA valve closed
L17	Successful ignition	5	Indicate RPM
L18	Ignition failure	5	Indicate RPM
L15, L16	TRUE	3	Indicate FG valve open
L09	RPM increasing	1	Indicate RPM
L10	RPM.EQ. RPM reqd	1	Indicate RPM
L11	RPM decreasing	1	Indicate RPM
L07, L08	TRUE	2	Indicate SA valve open
L05, L06	TRUE	1	Indicate ignition on
L04	TRUE	Function of pressure	Indicate operator returns after wait
L02	S.A. pressure OK	1	Indicate operator will try a start
L03	S.A. pressure too low	1	Operator decides to wait
L56	TRUE	1	Reinitialize parameters
L54, L53	TRUE	1	
L37	TRUE	1	Prepare for another simulation
L36	TRUE	1	Indicate loaded
L33	Not loaded	1	Indicate temp
L34	Too hot	1	Shut off FG and Ignition
L35	Loaded	1	Indicate temp shut down
L31, L32	Min. idle time complete	R.V.	Indicate min. idle complete
L41	TRUE	1	Indicate FG off
L42	F.G. Valve open	1	
L43	F.G. Valve closed	1	Indicate FG off
L48	TRUE	1	Indicate SA off
L47	SA valve open	1	
L46	SA valve closed	1	Indicate SA off
L49	TRUE	1	Indicate ignition off
L55	Initiation	1	
L44	Initiation	1	Indicate time to return prime
L45	TRUE	1	

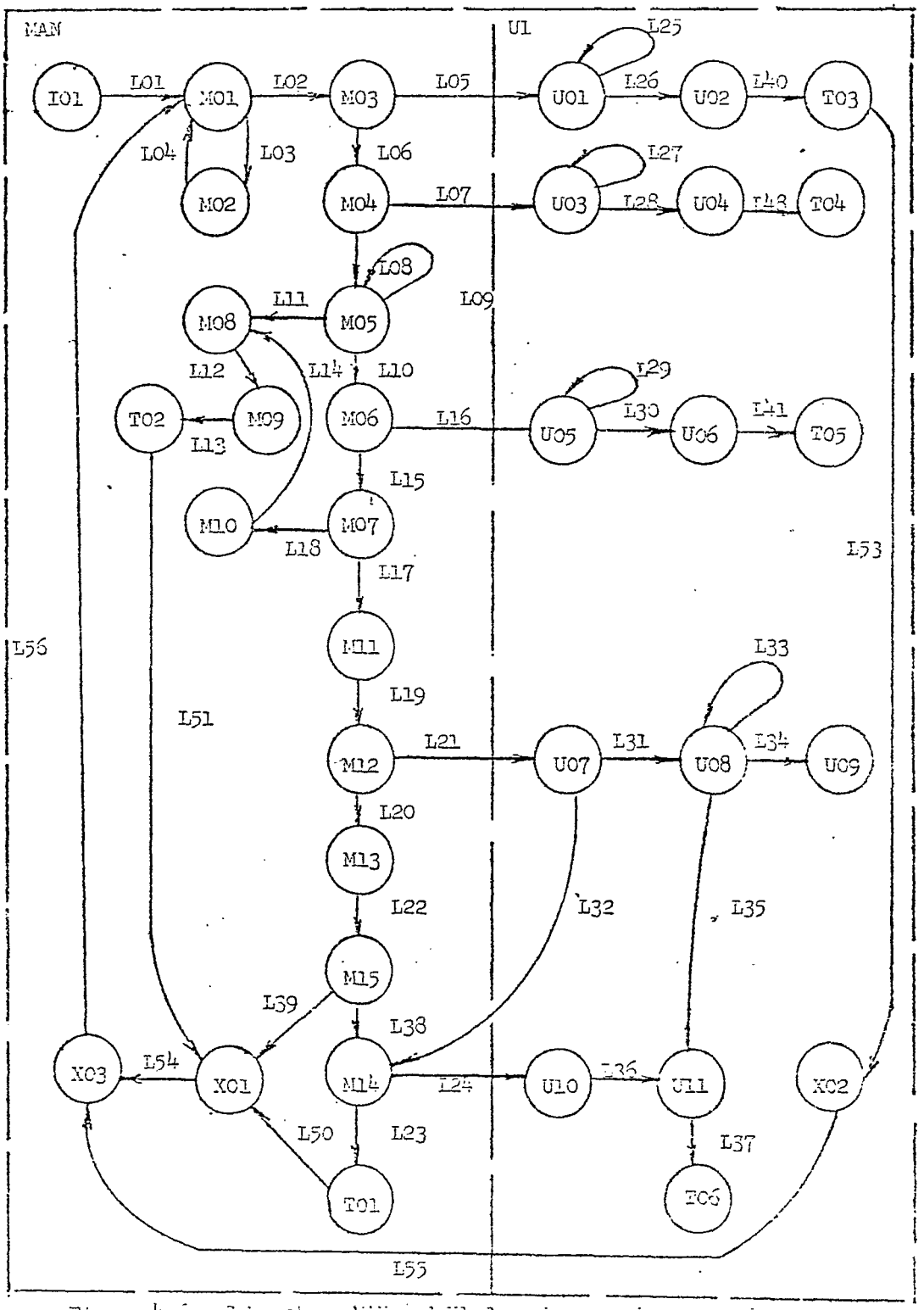

Figure 4.6. Subsystems MAN and U1 for microscopic approach.

running, and the rate of pressure decrease which each engine maintains while cranking on air. Note that no links emanate from this subsystem. Communication with other subsystems is accomplished via global variables. This demonstrates an important feature of the system state model, namely, the completely autonomous behavior of a subsystem, which interacts with other subsystems at a "global" level only. In this example, the parameters of interest, which are stored in common (global to all subsystems), include pressure at this instant of time, maximum pressure (at which the compressor turns off), minimum pressure (at which the compressor turns on), a "compressor switch" which indicates whether or not the compressor is on, and five "engine switches" which indicate whether or not a particular engine is cranking on air. The various engines, of course, may consume air at different rates.

The subsystem, MAN, which models the operator's activity involves only sequential activity. We are saying that at the macroscopic level, the man can do only one thing at a time. There is an implied start up sequence in $\mathcal{S}$ which is representated in $\mathcal{M}$ by ordering the units in the sequence that they should be started. For example, system state M01 (Figure 4.5.3) which corresponds to "determine if there is an idling unit ready to be loaded" involves scanning an array of status codes which would indicate the existence of a unit in this category. The scan always is done in the prearranged sequence. A similar scan of status codes is used to "determine if there is a unit ready to idle" in system state M02. This scan also is done in the same prearranged sequence implied in $\mathcal{S}$, i.e., in the order of increasing unit number.

The five unit subsystems, U1 thru U5, may each have various system states active simultaneously. A list, IS, was used to record the status of each unit. The classifications selected were as follows:

Value	Meaning
0	Untried
1	Failed to start
2	Idling, not ready to load
3	Idling, ready to load
4	Loaded
5	Failed to load
6	Gas temperature shutdown

For example, when IS (3) = 3 and IS (4) = 4, the interpretation is "Unit 3 is ready to load and unit 4 is already loaded". As mentioned in 4.2, all five units behave in a deterministic manner, based on "correct" responses at each step. Therefore status codes of "5" and "6" do not appear since program logic does not allow these failures during startup. A status code of "1" does appear during the time an engine cranks on air. As soon as ignition takes place, however, this code is changed to "2", indicating the unit is now idling.

The results of the macroscopic simulations are shown in Appendix E. Each transformation includes a write statement which shows the present value of starting air pressure, status of each unit, and status of the compressor. This material is condensed into the graphic results shown in Figure 4.7. The status activity dump in the appendix shows model cycling termination after 490 cycles. The time increments chosen were "diciminutes", so this actually represented 49 minutes to load the plant.

4.5.2 Microscopic Approach

The dynamic behavior of the starting air subsystem, SA, is identical to that in the macroscopic approach, except that only one unit is involved so there will be only one pressure reduction rate.

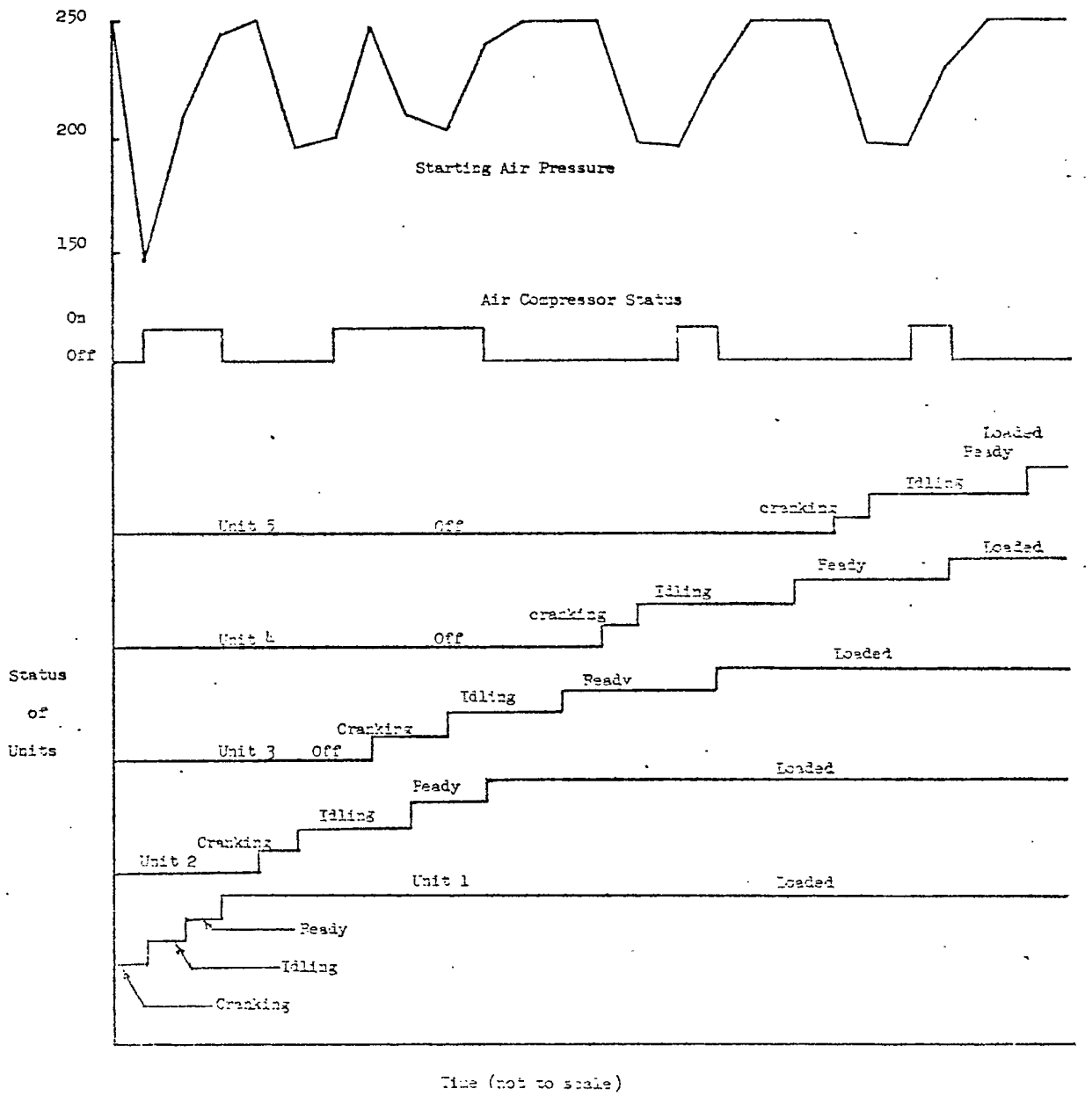

Figure 4.7 Summary of typical simulation results for a multiple approach. Time scale is intended to show relationship of events, not real time.

The subsystems which model the operator and the unit, MAN and U1, are conceptually different from the macroscopic representation. Computer output, such as shown in Figure 4.8, traces the detailed actions of the man and of the unit. Appendix E contains selected output from twenty simulated starts. These simulations are based on probabilistic evaluation of all "branching" conditions. Appendix B contains listings of programs used to obtain values from various probability distributions.[3] As mentioned in 4.4.2, the starting air pressure was not re-initialized for each of the twenty simulations, but was permitted to run continuously across simulation "boundaries". Therefore the final pressure for one run becomes the initial pressure for the next run. This means that in system state M01, "read pressure gage", the operator in general will see a different pressure for each simulated start. If the pressure is below a specified value, he will wait (system state M02) and then transition back to "read pressure gage". The length of time consumed by "wait" is logically going to be a function of his pressure reading. For example, an extremely low pressure would indicate that he might take a coffee break and then return to check the pressure again. The system state model allows this idea to be easily represented. The transition time for L04 (Figure 4.6) is simply an expression involving the current value of pressure. For simplicity, wait time was assumed

---

[3]The random number of generator is based on RANDU, from the IBM Scientific Subroutine Package. The random variables were obtained from subroutine ATIME which was based on material presented by Dr. C. E. Donaghey, University of Houston, in a graduate Industrial Engineering course, Spring Semester, 1971.

SIMULATION OF ANOTHER START

TIME	STEP JUST COMPLETED		AIR PRESSURE
	MAN	ENGINE	
1	HE READ STARTING AIR PRESSURE = 210 & DECIDES TO WAIT		
12	WAIT TIME COMPLETED		221
13	HE READ STARTING AIR PRESSURE = 222 & DECIDES TO TRY A START		
14	HE TURNED ON IGNITION SWITCH		223
16	HE OPENED STARTING AIR VALVE		223
17	RPM= 10 RPM LAST READING= 0		224
18	RPM= 20 RPM LAST READING= 10		223
19	RPM= 30 RPM LAST READING= 20		222
20	RPM= 40 RPM LAST READING= 30		221
21	RPM= 50 RPM LAST READING= 40		220
22	RPM= 60 RPM LAST READING= 50		219
23	RPM= 70 RPM LAST READING= 60		218
24	RPM= 80 RPM LAST READING= 70		217
25	RPM= 90 RPM LAST READING= 80		216
26	RPM= 100 RPM LAST READING= 90		215
27	RPM= 110 RPM LAST READING= 100		214
28	RPM= 120 RPM LAST READING= 110		213
29	RPM= 130 RPM LAST READING= 120		212
30	RPM= 140 RPM LAST READING= 130		211
31	RPM= 150 RPM LAST READING= 140		210
32	TACH READING WAS 150		209
35	OPENED FUEL GAS VALVE		205
40	TACH READING WAS 210		201
42	CLOSED SA VALVE		199
43		ENGINE CRANKS ON AIR FOR LAST TIME	200
47	HE SET GOVERNOR TO IDLE		204
47		IDLE TIMER STARTS	205
49		MIN IDLE TIME COMPLETED	206
49		FLAG DISPLAYED FOR OPERATOR	206
50		TEMP = 100	207
51		TEMP = 110	208
52		TEMP = 120	209
53		TEMP = 130	210
54		TEMP = 140	211
55		TEMP = 150	212
56		TEMP = 160	213
57		TEMP = 170	214
58		TEMP = 180	215
59		TEMP = 190	216
60	HE RETURNS TO UNIT AFTER WAIT		217
60		TEMP = 200	217
61		IDLE TIME TEMP MONITOR DEACTIVATED	218
62	LOADS UNIT AND LEAVES		219
62		DISCH & SUCTION VALVES OPEN, BYPASS CLOSES	219
63		ENGINE TAKES LOAD	220
64		ENGINE OPERATING UNDER LOAD	221
SHUT DOWN AND SIMULATE ANOTHER START			
64		ENGINE TAKES LAST CHARGE OF FUEL	221
64		IGNITION SWITCH OPENS	221
65		FUEL GAS STOPS	222
65		IGNITION CIRCUIT OFF	222

Figure 4. Sample output from a typical simulation trial of the microprocessor program.

to vary directly with pressure increase required. He will continue reading the pressure (and waiting if required) until the minimum pressure is reached which will justify trying to start the engine. He then turns on the ignition and the starting air. The engine commences to crank over on air while he observes the tachometer. When a speed of 150 RPM is reached he turns on the fuel gas. There is a 0.7 probability of successful ignition. Therefore about 70 per cent of the simulation runs will show him closing the starting air valve and setting the governor to "idle". At this point, conceptually, the man and the engine part company. The man 'waits' (or brings other units to idle) for a period of time determined by a random value obtained from a uniform distribution. Meanwhile, the unit idles for a minimum time determined by another random value from the same distribution. Once this minimum idle time is exceeded the unit is subject to automatic high temperature shutdown. (system state U08). Usually, the operator will return in ample time to load the unit and allow a completely successful start-up.

4.6 Example Results

This example shows alternate conceputalizations based on varying levels of specificity. (Recall that the Critical Path Model, Chapter 3 involved alternate conceptualizations at same level of specificity). The system state model readily allows the system, $\mathcal{S}$, to be specified in terms convenient for each level of specificity. Over-all plant considerations such as total start-up time, effect of varying starting air system capacity, or adding personnel can easily be analyzed from simulation results such as those presented in Figure 4.7.

The arrangement of engine controls can be of importance in the microscopic simulation results. Effects of the operator waiting for starting air pressure to build up or for the unit to complete its minimum idle time can also be readily shown.

The microscopic approach, which lends itself to repeated simulations, could be conceptualized along different lines and increase its generality with little increase in programming. For the output shown (Appendix E) it could easily be imagined that twenty units are each tried once, instead of one unit being tried twenty times. If there were many units of very similar characteristics, the additional overhead of coding to handle the bookkeeping would be minimal. Since starting air pressure was allowed to run continuously during the twenty simulated starts, the model could be construed to represent the starting of twenty identical units.

For both levels of specificity, an additional block could be added which would represent the effect of the pipeline pressure and flow on the station itself.

4.7 General Conclusions

The system state model is suited for studying industrial systems, including certain human activity, at varying levels of specificity. The flexibility of choosing the desired level of specificity is an improtant advantage in the design of many systems. Of course the steps may also be represented with deterministic or probabilistic sequence, depending upon the design level involved. For example, the air compressor should first be sized on the basis of all units starting successfully. The effect of repeated tries on some units could then be studied. The activity of the blocks was readily represented as discrete processes,

even though much of the activity involves physical systems which are continuous. Chapter 5 deals with continous processes in detail. At this point it should simply be noted that an appropriate selection of time increment (in this example 0.1 minute) will produce adequate results. The system state model construct allows problem formulation in steps and links which are easily describable in English and engineering symbolic terms. The model could be a valuable tool in many industrial engineering applications.

5. CONTINUOUS PROCESS

5.1 Introduction

Continuous processes, especially in many "non-steady state" systems, must in general be represented by differential equations which describe the phenomena. There are some simulation languages such as CSMP (Continuous System Modeling Program) and CSSL (Continuous System Simulation Language) which are designed to simulate systems described by ordinary differential equations. Of course, there are some systems which are not describable in terms of ordinary differential equations, so the problem is sometimes too general for these special purpose languages. In these cases, the modeler must look for a difference equation relationship, or in some other manner imagine that the process is actually occurring in discrete steps. It is the conceptualization of a continuous process as a discrete process which occurs in increments of "manageable" size which allows the digital computer to be widely used in continuous process problems.

5.2 Example System

This example deals with analyzing a spill from a liquified natural gas (LNG) storage tank. The system can be partitioned into several blocks, each of which is a separate continuous process. Several of the blocks continuously interact with one another. Effectively, the "output" or "effect" of one block may become the "input" of "cause" to another block. The geometry of the system is shown in Figure 5.1.

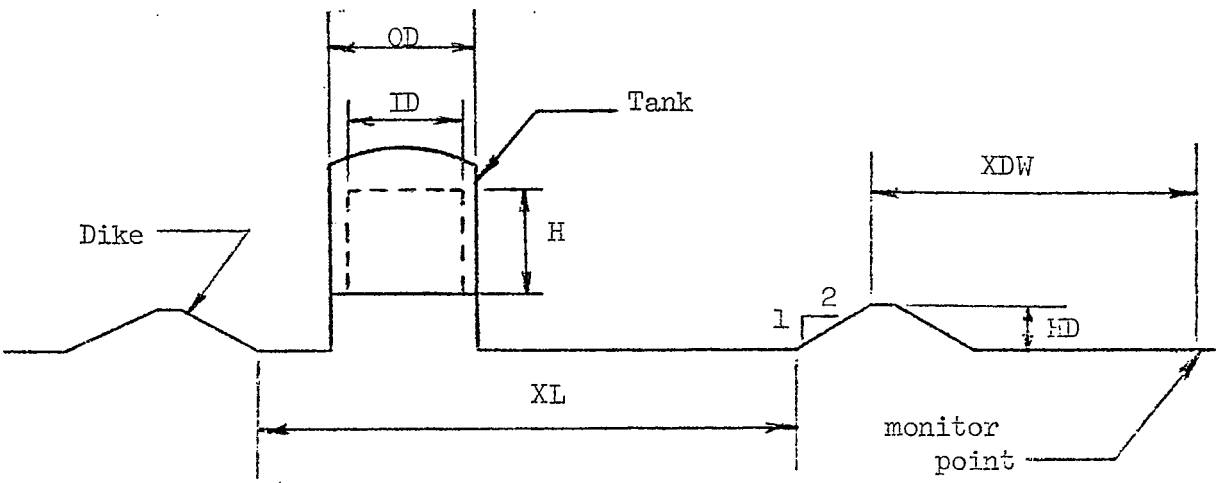

Figure 5.1 LNG storage facility

Legend

OD	Outside diameter of tank = 150 feet
ID	Inside diameter of tank = 140 feet
H	Initial head of liquid above puncture = 100 feet
HD	Height of dike = 6 feet
XL	Length of bottom of diked area = 900 feet
XDW	Distance to downwind monitor point = 1000 feet
XW	Width of bottom of diked area = 300 feet

It is assumed that a puncture suddenly occurs in the base of an LNG storage tank and that the contents of the tank flows out into the diked area surrounding the tank. The liquid flows out at a decreasing rate, and spreads across the diked area in a layer of uniform thickness. This spreading layer, due to boiling and due to the freezing of water vapor at its periphery, is assumed to be one foot deep. The one foot deep layer spreads across the diked area until the entire bottom of the diked area is covered with liquid. Once the entire bottom is covered, liquid depth is incremented over the entire liquid surface area. To simplify the arithmetic involved in this example, the floor of the diked area is assumed to be horizontal. As soon as liquid appears in the dike, vapor will be formed at the liquid surface. The vapor is heavier than air and will remain on the surface of the liquid, and on the surface of the ground adjacent to the liquid until the liquid completely covers the bottom of the diked area. The vapor is generated at a decreasing rate, until eventually it reaches the top of the dike. Of course, the generation of vapor serves to decrement the quantity of liquid in the dike. When the vapor goes over the top of the dike, it will be dispersed downwind according to wind velocity and weather conditions. It is desired to find the vapor concentration at a particular downwind location. This might be, for example, a point at grade elevation at the LNG plant property line. The importance of the vapor concentration, of course, is that the gas-air mixture is flammable within a certain range of concentrations. The computation which determines downwind concentration is based on a method by Parker [16].

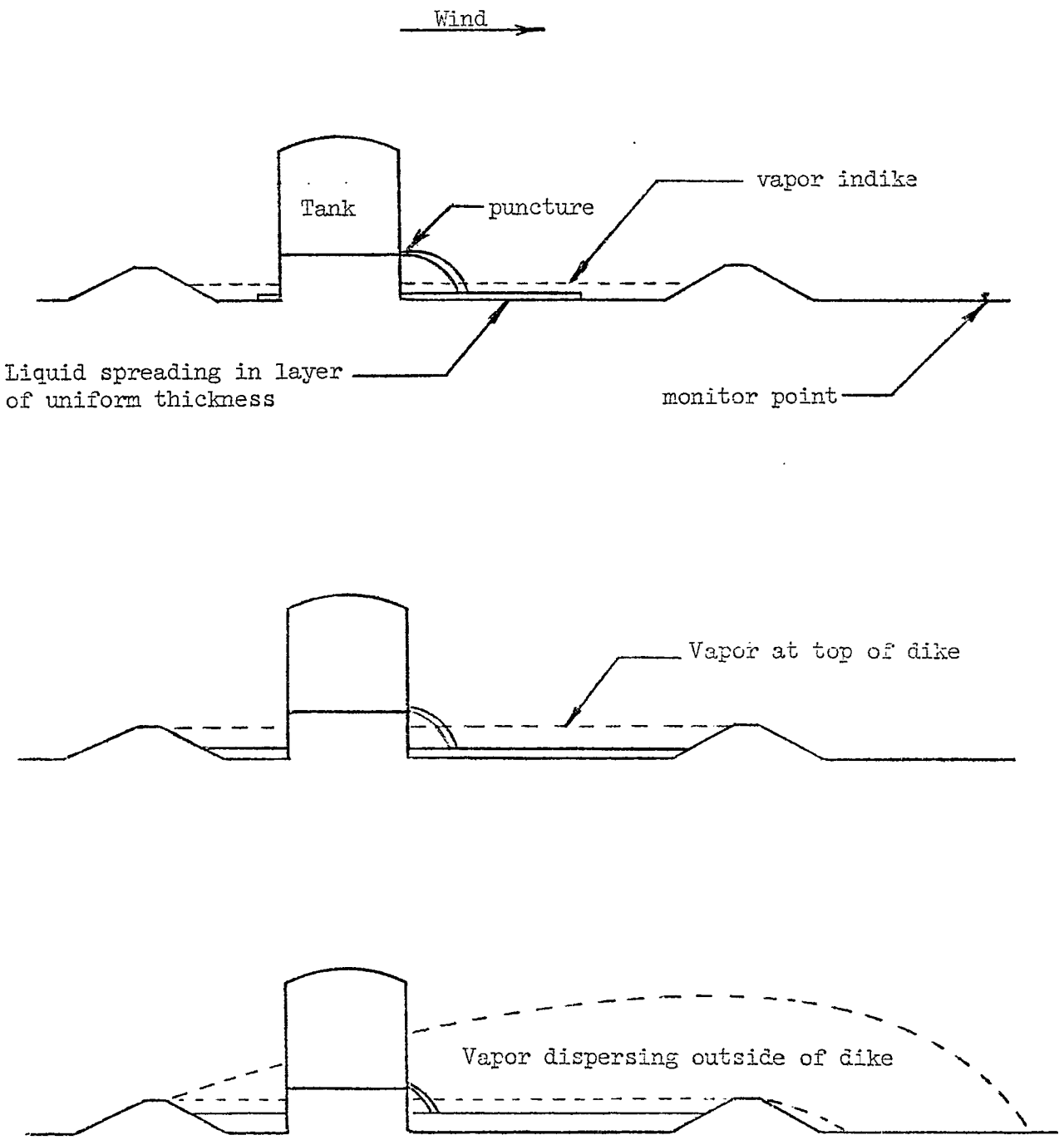

Figure 5.2 The LNG spill continuous process system.

Conceptualization of three different states of this system is shown in Figure 5.2.

5.3 Formal System, $\mathcal{S}$

The system is formalized as shown in Figure 5.3. The first block, TANK, simply represents the activity related to the punctured tank itself. After the initial 'start' step, we simply visualize the leak as occurring incrementally. With each time increment, there is an associated mass of LNG which flows out of the puncture. This reduces the amount of LNG remaining in the tank. Since the tank is of constant horizontal cross section, this directly reduces the head of liquid above the puncture. The reduced head will mean that a slightly reduced flow rate will result in the next time increment. The process continues to cycle through this step, "mass of LNG leaves tank", for the duration of the problem, or until the tank is empty.

Each time a "mass of LNG leaves the tank", the quantity of LNG in the dike is incremented by this amount of material. The block "LIQUID IN DIKE" contains the steps in the mass balance process which (a) spreads the liquid in a layer of uniform, of one foot thickness until the floor of the diked area is covered, and then (b) increments the depth of the pool and the area of the pool as the liquid builds up in dike.

As soon as "liquid enters the dike" a link is taken which initiates the formation of vapor at the liquid surface. Once initiated, this step continues to be active for the remainder of the problem. The formation of vapor activates two other steps, namely (1) incrementing the mass (and hence the dimensions) of the vapor layer and (2)

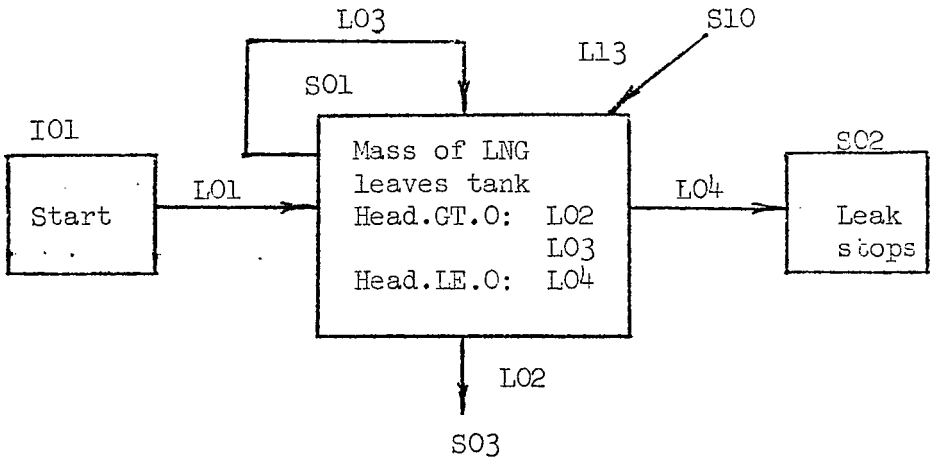

Figure 5.3.1 The block "TANK" of the formal system,

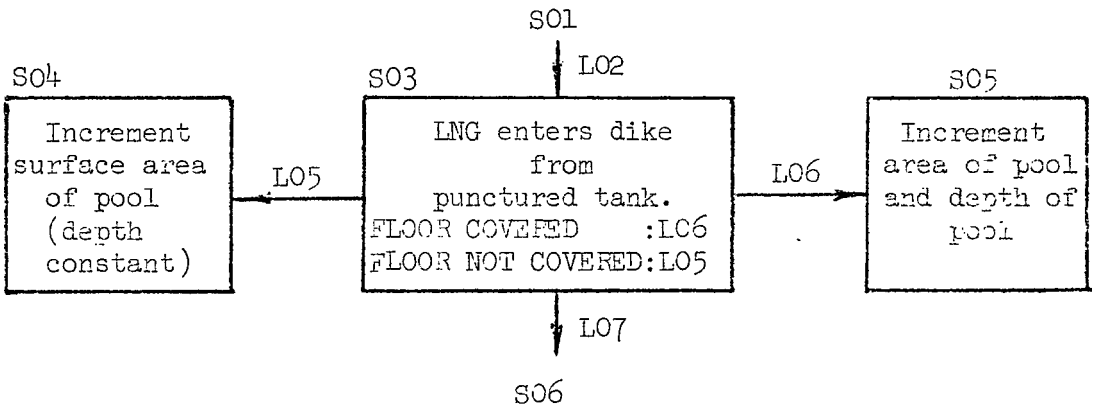

Figure 5.3.2 The block "LIQUID IN DIKE"

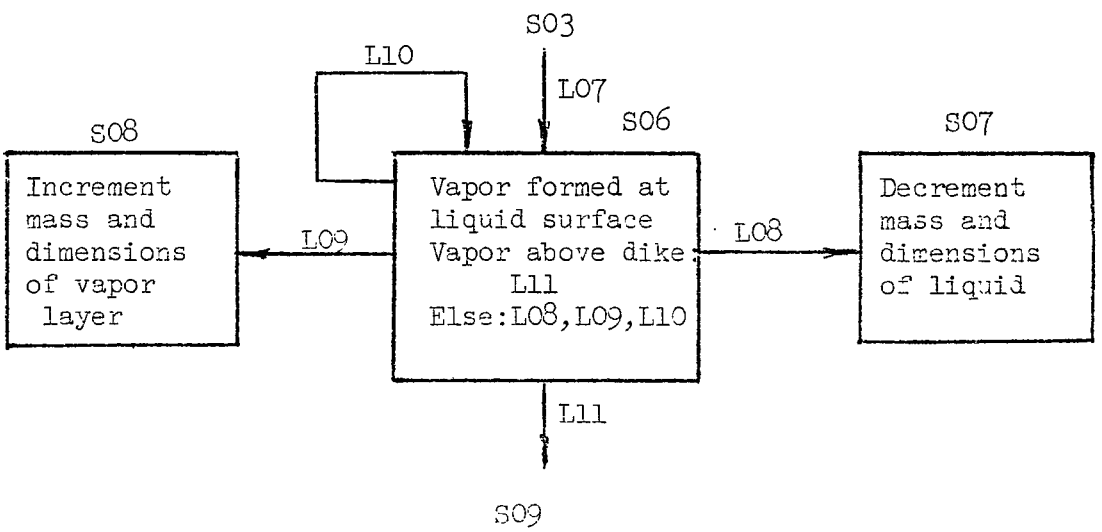

Figure 5.3.3 The block "VAPORIZATION IN DIKE"

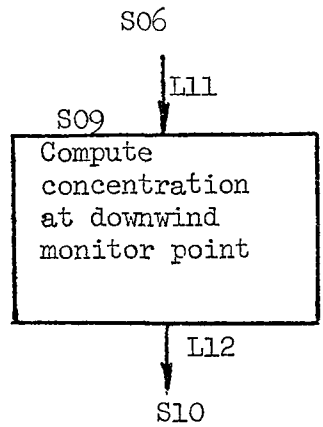

Figure 5.3.4 The block "VAPOR DISPERSION"

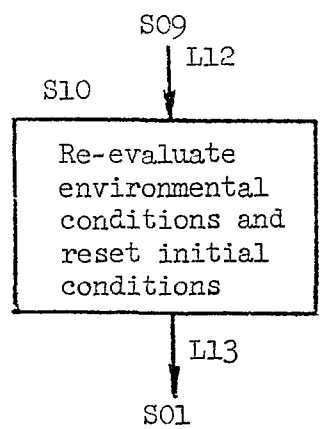

Figure 5.3.5 The block "ENVIRONMENT"

decrementing the mass (and hence the dimensions) of the liquid pool. The formation of vapor and related changes in vapor dimensions and liquid dimensions take place in a separate block labeled "vaporization in dike".

When the vapor reaches the top of the dike, the activity switches to another block, "vapor dispersion downwind." This block consists of only one step which simply computes maximum downwind concentration of gas at the point in question.[2] The conceptualization of the system is oversimplified at this point by neglecting the effect of any further increase in liquid depth. Actually the liquid layer would continue to increase in depth and force vapor out of the dike by displacement as well as by generation at the liquid surface.

The system is formalized to include one more block, "environment", which contains only one step. This step simply allows the model user to evaluate another set of environmental conditions, for example, wind velocity, weather category etc., re-initialize the necessary parameters, and model the system under the new environmental conditions. In this example the only condition which was changed was the effective cross-sectional area of flow from the puncture. Wind and weather were assumed constant at reasonable "worst case" values. The cross section of flow from the puncture was varied from 100 to 20 square feet, in increments of 20 square feet.

---

[2]This calculation is based on methods employed in a computer program developed by Dr. Robert O. Parker of NYU, and H. L. Cook and J. C. Puls of Transcontinental Gas Pipe Line Corp., Houston, Texas, 1970.

5.4 Model Representation, $\mathcal{M}$

The system representation, $\mathcal{S}$, maps directly to the model representation, $\mathcal{M}$, shown in Figure 5.4. This SS-graph demonstrates the conciseness with which a complex continuous process can be represented. The coding, as showin in Appendix F, is quite brief. The five subsystems are all designated as "hardware" or "multiplicity of activity". All system states within a given subsystem, are at the same priority level so there may be simultaneous activity whenever required. This model representation allowed the environment parameters to change only at the end of a complete simulation run. The transition L13 (Figure 5.4) from the environment subsystem's S10 simply invokes a transformation which adjusts the initial condition parameters. For example, wind velocity or weather category might be varied while puncture size and initial head are kept constant. For this example, however, wind, weather, and head were held constant at "worst case values" and the puncture size was varied.

5.5 Dynamic Model

In order to approximate a continous process as a discrete process a suitably small time increment must be chosen. The cycle time for all subsystems was unity. However, the system states which "generate" liquid from the tank (S01) and "generate" vapor (S06) do so by continually transitioning back to themselves (L03 and L10 respectively) every two time cycles. Although a transition time of one would be the intuitive choice, a time of two was necessary due to a behavioral characteristic of the current system state model software implementation. These "generate" system states, which initiate all mass balancing for each

Figure 5.4 Legend

Subsystem	Cycle Time	Function Level
TANK	1	1 (multiplicity of activity)
LID	1	1
VID	1	1
VDD	1	1
ENV	1	1

System State	Priority	Input Logic
I01	0	+
All Others	1	+

Transitions	Condition	Time	Transformation
L01	TRUE	0	Initialize parameters
L02	Head.GT.0	1	Increment quantity in dike, decrement Head
L03	Head.GT.0	2	NO
L04	Head.LE.0	1	Write "Leak Stops"
L05	Bottom not covered by liquid	1	Increment area of pool
L06	Bottom is covered by liquid	1	Increment area and depth of pool
L07	TRUE for first mass of LNG to leave tank	1	Sets Condition for L07 to FALSE
L08	TRUE	1	Decrement pool depth and area
L09	TRUE	1	Increment vapor depth and area
L10	Vapor below top of dike	2	NO
L11	Vapor above top of dike	1	Record time
L12	TRUE	1	Compute downwind concentration
L13	TRUE	1	Reinitialize parameters

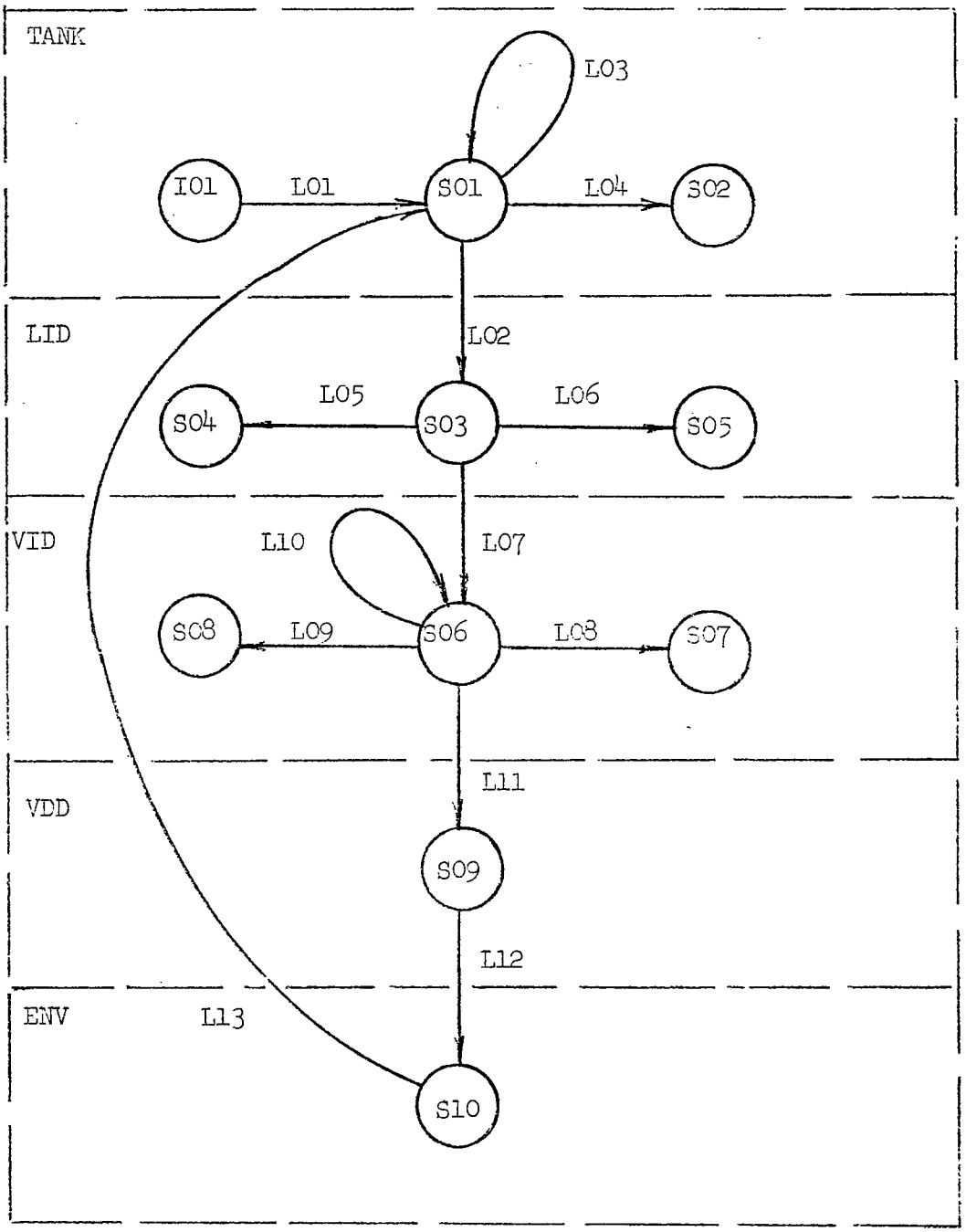

Figure 5.4 Model representation, $\mathcal{M}$, of the continuous process.

time increment, were conceptualized to consume one second of real time. Therefore, throughout the program, the value of model time in each subsystem is divided by 2 to obtain real time. It is the resulting value of real time that appears in the output.

Sometimes conceptual difficulties arise when the modeler attempts to "sequence" the continuous events. For example, one might ponder the relative merits of (1) incrementing liquid pool area and then (2) generating vapor with the resultant reduction in pool area, or performing these operations in reverse order. For a suitably small time increment, such questions are not relevant. It is possible in the case of this example to easily use a suitably small increment, such that "sequence" of steps and boundary conditions, such as vapor reading the top of the dike, become unimportant. For example, the program tests for the vapor layer reaching or exceeding the top of the dike. The amount by which it could exceed the top is negligible in the chosen time increment.

The activity of the system can be followed from the portions of the computer output shown in Figure 5.5. This run is based on a cross section of flow of 100 square feet from the puncture. As time elapses in 0.5 second intervals, the head and quantity in the tank decreases at a decreasing rate. The quantity in the dike increases at a decreasing rate. The depth of liquid is nearly constant as it spreads across the bottom of the diked area in a one-foot layer. It decreases in depth only by the amount of vapor which is formed. Prior to the time = 16.5, the depth of vapor above the top of the liquid is zero. Up until this time, the vapor which is generated simply covers the portion of the bottom of the diked area not yet covered by liquid. At

LNG SPILL SIMULATION

T	H	QT	QD	DL	DV	AREDL	RR
0.000000	99.47266	8024.957	8024.957				
1.000000						8024.957	
1.500000	98.95872	8004.012	16028.97				
1.500000				0.9993560	0.0	8024.957	0.4622412
2.000000						16039.27	
2.500000	98.44012	7983.066	24012.04				
2.500000				0.9987460	0.0	16039.27	0.4406242
3.000000						24042.18	
3.500000	97.92290	7962.121	31974.16				
3.500000				0.9981546	0.0	24042.18	0.4257817
4.000000						32033.27	
15.50000	91.82222	7710.773	125885.6				
15.50000				0.9918356	0.0	119111.3	0.3617955
16.00000						126947.4	
16.50000	91.32268	7689.828	133575.4				
16.50000				0.9911404	0.5999999E-01	126947.4	0.3564634
17.00000						134769.4	
17.50000	90.82449	7668.883	141244.3				
17.50000				0.9906527	0.1499999	134769.4	0.3511313
18.00000						142577.0	
18.50000	90.32767	7647.934	148892.2				
18.50000				0.9902485	0.2399998	142577.0	0.2910124
19.00000						150358.4	
19.50000	89.83220	7626.988	156519.1				
31.50000				0.9852437	1.519951	242522.5	0.2653373
32.00000						250099.3	
32.50000	83.51500	7354.680	253763.4				
33.00000				0.9846779	1.629953	250099.3	0.2633623
33.00000						257659.8	
33.50000	83.03859	7333.730	261097.1				
33.50000				0.9845143	1.719953	257659.8	0.2613874
34.00000				1.013578		252328.5	
34.50000	82.56354	7312.785	268409.9				
34.50000				1.013218	1.719953	252328.5	0.2594123
34.50000				1.013218	1.809952	252328.5	0.2594123
35.00000				1.041649		257208.2	
35.50000	82.08984	7291.836	275701.7				
35.50000				1.041291	1.809952	257208.2	0.2574373
35.50000				1.041291	1.899951	257208.2	0.2574373
64.50000	68.94475	6684.309	478051.4				
64.50000				1.815252	4.079944	260970.8	0.2001624
64.50000				1.815252	4.149943	260970.8	0.2001624
65.00000				1.840853		261094.1	
65.50000	68.51189	6663.359	484714.8				
65.50000				1.840577	4.149943	261094.1	0.1981874
65.50000				1.840577	4.219943	261094.1	0.1981874
66.00000				1.866086		261217.1	
66.50000	68.08033	6642.410	491357.1				
66.50000				1.865813	4.219943	261217.1	0.1962125
66.50000				1.865813	4.289943	261217.1	0.1962125

VAPOR REACHES TOP OF DIKE AT T = 1.099999 MIN

CONCENTRATION AT DOWNWIND POINT = 19.93262 PERCENT

Figure 5.5. Selected output from simulation based on 100 sq. ft. puncture flow.

T = time (sec)
H = head in tank (ft)
QT = LNG leaving tank (cf)
QD = total LNG in dike (cf)
DL = LNG depth in dike (ft)
DV = vapor depth above LNG (ft)
AREDL = surface area of LNG (sq ft)
RR = regression rate (in/min)

time = 16.5, the bottom is covered, partially by liquid and the remainder by vapor, as evidenced by the depth of vapor (measure from top of the liquid) which changes from zero to 0.06 feet. The next significant change in system configuration occurs at time = 33.5. Here the liquid has completely covered the bottom of the diked area and for the first time, there is an increase in liquid depth. From this point on, the increase in pool area is quite small, being dependent only on the sloped sides of the dike. The next event of interest occurs at time = 66.5 when the vapor reaches the top of the dike as evidenced by liquid depth plus vapor depth exceeding the 6-foot dike height. Throughout the course of the problem, the regression rate (evaporation rate expressed as change in depth) has steadily decreased. After the vapor reaches the top of the dike, the computations which yield concentration at the downwind point are carried out as mentioned in 5.3.

5.6 Example results

For the geometry and environment of this example, it was found that downwind gas concentration varied with puncture size as shown in Figure 5.6. This indicates that a puncture whose flow cross sectional area was less than 20 square feet would not be much of a hazard at the downwind point. Concentration, for practical purposes, levels out at about 20 per cent, since a puncture larger than one with 100 square feet of flow area would probably result in the partial collapse of the tank. This type of disaster would be something of the nature of a plane crashing on the tank and is not reasonable to consider here.

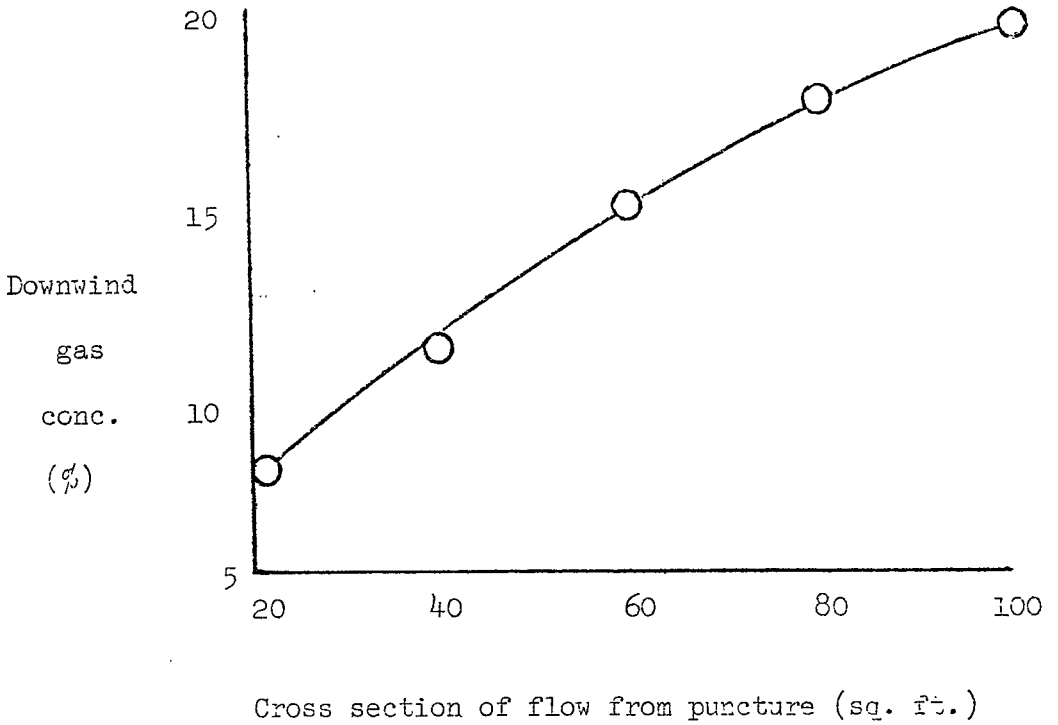

Figure 5.6 Downwind concentration as a function of puncture size

5.7 General Conclusions

This example is typical of a large class of continuous processes which can be handled concisely by the system state model. The important model aspect is simply the ability to concisely represent interrelated simultaneous activities. Of course, an appropriate time increment must be chosen for evaluating the effects of these activities.

There is a definite place for the system state model in the design of LNG storage facilities. Once the general geometric layout is established, various design parameters can easily be varied to determine their effect on downwind concentrations. For example, the regression rate, which is very rapid in the early time of a spill, and tapers off to a relatively low value later in the spill is very important. By covering the dike floor with insulating material, the regression rate

can be reduced, resulting in more manageable vapor generation. The process can readily be modeled for a family of regression rates, where each family is a function of dike floor material and time.

Another strength of the system state model is demonstrated in this example, namely the ease with which the modeler can launch into conventional FORTRAN calculations whenever desired. All of the model activity up to the point at which "vapor comes over the dike" was really only mass balance accounting which insured adequate representation of the system so that the correct time, and hence regression rate, would be available for the computations which determine concentration.

In general, any process involving noncompressible flow could readily be handled in the manner of this example. A natural extension of the methods used in this example would be to model the surface area of the "pure" vapor layer at the top of the dike as a set of smaller (more "manageable") vapor cloud generators. Each incremental vapor cloud generator would produce a "subcloud", whose movement downwind would be modeled. The cumulative effect of the "subclouds" at any point would yield the concentration at that point.

6. DISCRETE PROCESS

6.1 Introduction

There are some systems whose dominant characteristic is simply that their dynamic behavior occurs in discrete increments. This discrete behavior may be in regard to time, or to space, or both. Most queueing problems, for example, are special cases of these types of systems. The Turing Machine, discussed in Chapter 2, is also a classic example of a discrete process. The digital computer itself is an outstanding example of a physical device which behaves like a discrete process. The interrelationships between computers which are very important in the field of telecommunication can add considerable complexity to a discrete system. For example, processors may share a common data file, resolve conflicts between updating the file and accessing the file, manage queues of requests for a resource, poll terminals and resolve many other problems related to system "overhead". The speed of the computing hardware makes the discrete nature of this activity practically invisible to most users. The fact that it is discrete, however, gives the digital computer the peculiar characteristic of being ideally suited for modeling itself.

6.2 Example System

This example deals with the interaction between two similar computers which are competing for a memory resource. The system is shown schematically in Figure 6.1. It is assumed that Computer No. 1 has "priority" over Computer No. 2. Whenever conflict arises over the use of the memory resource, it will be shown that the system state model construct allows straightforward modeling of two common priority handling schemes. These are as follows:

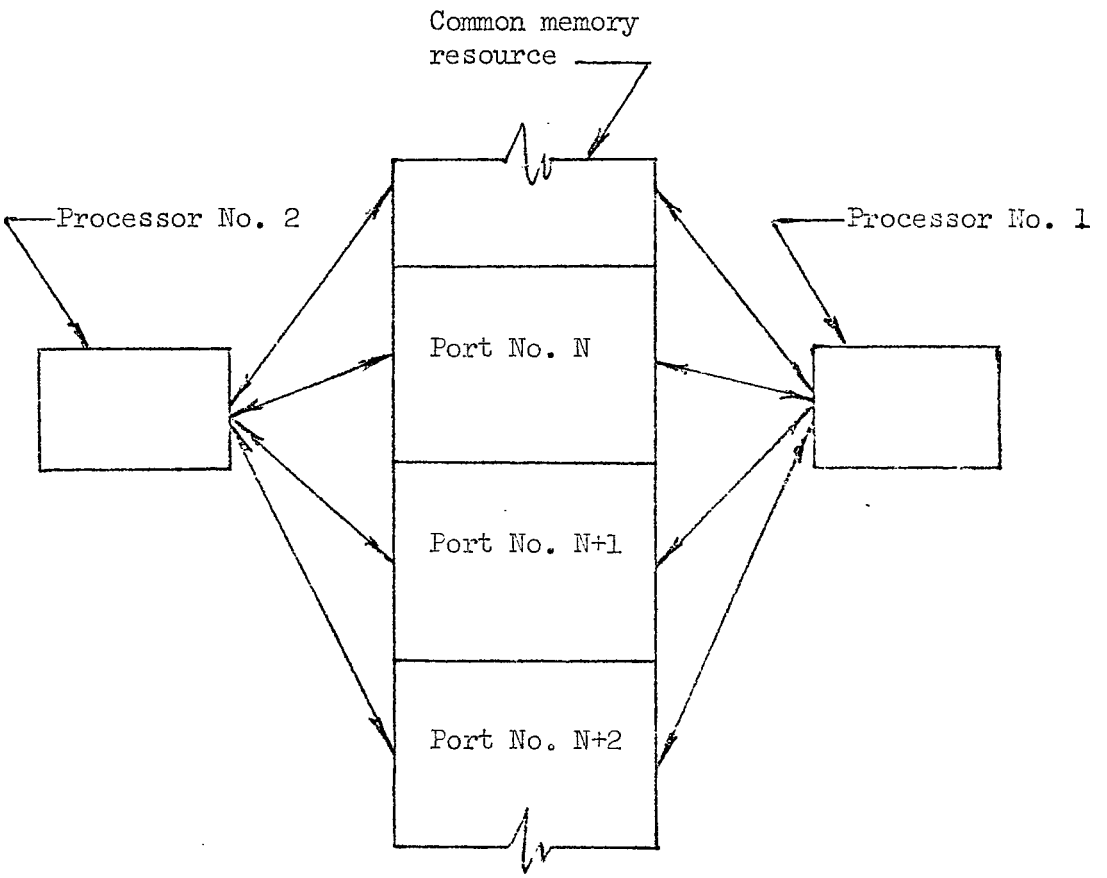

Figure 6.1 The Discrete System. Two processors access a common resource, ported memory. Once a processor requests access to a port, it will suspend activity until that access is completed.

(1) Interrupt: Processor No. 1 may interrupt Processor 2 anytime it desires to obtain the resource. Processor 2 is never allowed to interrupt Processor 1; it may use the resource only when Processor 1 is not using it.

(2) Interlock: Processor 1 will obtain the resource in the case of simultaneous request and Processor 2 will wait. If the requests are not simultaneous and either processor already has the resource, the other processor will wait for it to be released.

There is an additional consideration in the structure of the memory resource, namely that the memory is ported. For the purpose of this example, it is assumed that each port is an independent memory resource and that conflict will occur between the competing processors only when they both attempt to access the same port. The implication in this example is that for a very large number of ports very little conflict will occur. However, the advantage of increasing the number of ports is offset by the reduced memory resource available in each one, and by the overhead involved in routing requests to the proper port. The hypothetical system will be modeled as the number of ports ranges from 1 to 5 for the cases of both interrupt and interlock.

6.3 Formal System, $\mathcal{S}$

6.3.1 Interrupt

The Formal System $\mathcal{S}$, is shown in Figure 6.2. Steps GEN2 and GEN1 are continually generating requests for the memory resource. Each request has associated with it a specific port number and the required time in that port. The port number is generated on the basis of a uniform probability distribution. The access times are generated from

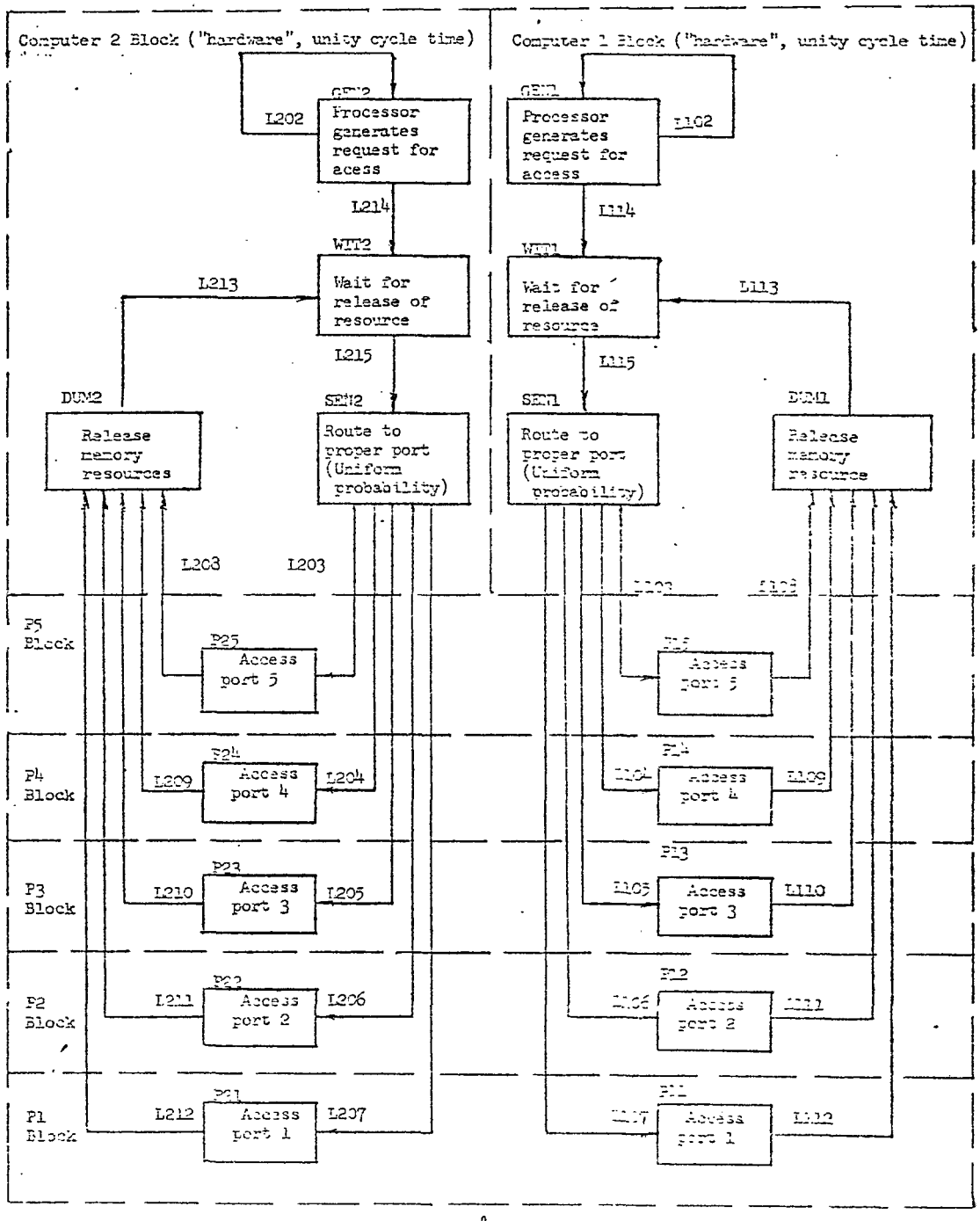

Figure 6.2. The formal system, $\mathcal{S}$, for the 2 state process. Blocks P5 through P1 are considered "hardware" for the interrupt case and "software" for the interleaved case. Upper times and transition times are unity, except for the times associated with the two "buffers" [illegible] [illegible] and [illegible] probability [illegible].

normal distributions. It is assumed that each processor will use only one port at a given time. Each processor will simply generate requests until it is notified that the memory resource is released. Its current request will then be routed to the proper port. Processor No. 1 which has priority will always be able to access the port even if Processor 2 was already accessing the port. Processor 1 will, therefore, always be able to proceed at its own pace. In the situation in which Processor 2 was already accessing the port which Processor 1 desires to access, Processor 2 activity will be suspended until Processor 1 completes its access and releases the port. At that time, Processor 2 will continue its activity. The Formal System is shown with 5 ports, however, the model representation will allow the number of ports to be varied for each simulation run. The system conceptualization for interrupt is simply based on representing each port as a separate block. These blocks are specified to allow multiplicity of activity. However, Processor 1's access step within each block has a higher precedence, or exclusive priority assigned to it, than the corresponding Processor 2 access step. It is the specification of the two exclusive priority levels within each port which actually represents the "interrupt" hardware capability.

6.3.2 Interlock

The Formal System concept for Interlock is also shown in Figure 6.2. In this case, the five blocks which represent the five memory ports are specified to allow singularity of activity only. This in effect allows access to each port on a first come first serve basis. Processor 1 has not lost its Interrupt capability. In the case of simultaneous access of the same port, however, collision must still be resolved. It will

be assumed that the precedence lies with Processor 1.

6.4 Model Representation, $\mathcal{M}$

6.4.1 Interrupt

The system representation, $\mathcal{S}$, which is shown in Figure 6.2 maps directly into the model representation, $\mathcal{M}$, shown in Figure 6.3. There are no initial steps or initial system states in the representation of this system. The "generate" system states, GEN2 and GEN1, were simply activated at Time = 0 by an initial order which causes their terminating transitions L202 and L102 to "complete" at Time = 0. As soon as these transitions "complete" the system states to which they terminate, GEN2 and GEN1, become active. This demonstrates a method of initiating model activity without resorting to 'Initial' system states which were used in preceding examples. There are three additional system states, XO1, XO2, and XO2 which do not have counterparts in $\mathcal{S}$. Their purpose is to invoke logic which will decrement the number of ports available to the processors. Initially, all five ports are available and when transition LO2 completes the appropriate heading is printed. After an arbitrary time, Say Time = 100, the transition conditions for L114 and L214 become FALSE, which prevents any more access requests from being "heard". Ample time is allowed for pending access requests to be completed, then transition LO4 completes. It invokes a transformation which decrements the number of ports available, resets initial conditions, and resets model time to zero. With model time once again less than 100, transition conditions for L214 and L114 become TRUE and access requests are again "heard". Transition LO2 completes once again and causes a new heading to be printed which reflects the new port configuration .

Figure 6.3 Legend

Subsystem	Cycle Time	Function Level
C2, C1	1	Multiplicity of Activity
P5,P4,P3,P2,P1	1	Multiplicity of Activity for "Interrupt" Singularity of Activity for "Interlock"

System State	Priority	Input Logic
I01,X01,X02	0	⊖
GEN2,SEN2,DUM2	1	⊖
GEN1,SEN1,DUM1	1	⊖
WIT2,WIT1	1	•
P15,P14,P13,P12,P11	1	⊕
P25,P24,P23,P22,P21	2 for "Interrupt" 1 for "Interlock"	⊕

Transition	Condition	Time	Transformation
L202,L102	TRUE	2	
L01	TRUE	0	
L02	TRUE	1	Write heading for output
L03	Time. LT.150	1	
L04	Time. GE.150	1	Decrement no. of ports, reset initial conditions, and reset time to zero.
L215,L115	TRUE	1	Generate port no. and required access time.
L203 thru L207	TRUE	1	Print message reflecting desired access.
L103 thru L107	TRUE	1	Print message reflecting desired access.
L208 thru L212	TRUE	Required access time	Print message reflecting completion of access.
L108 thru L112	TRUE	Required access time	Print message reflecting completion of access.
L213,L113	TRUE	1	
L214,L114	Time. LE.100	1	

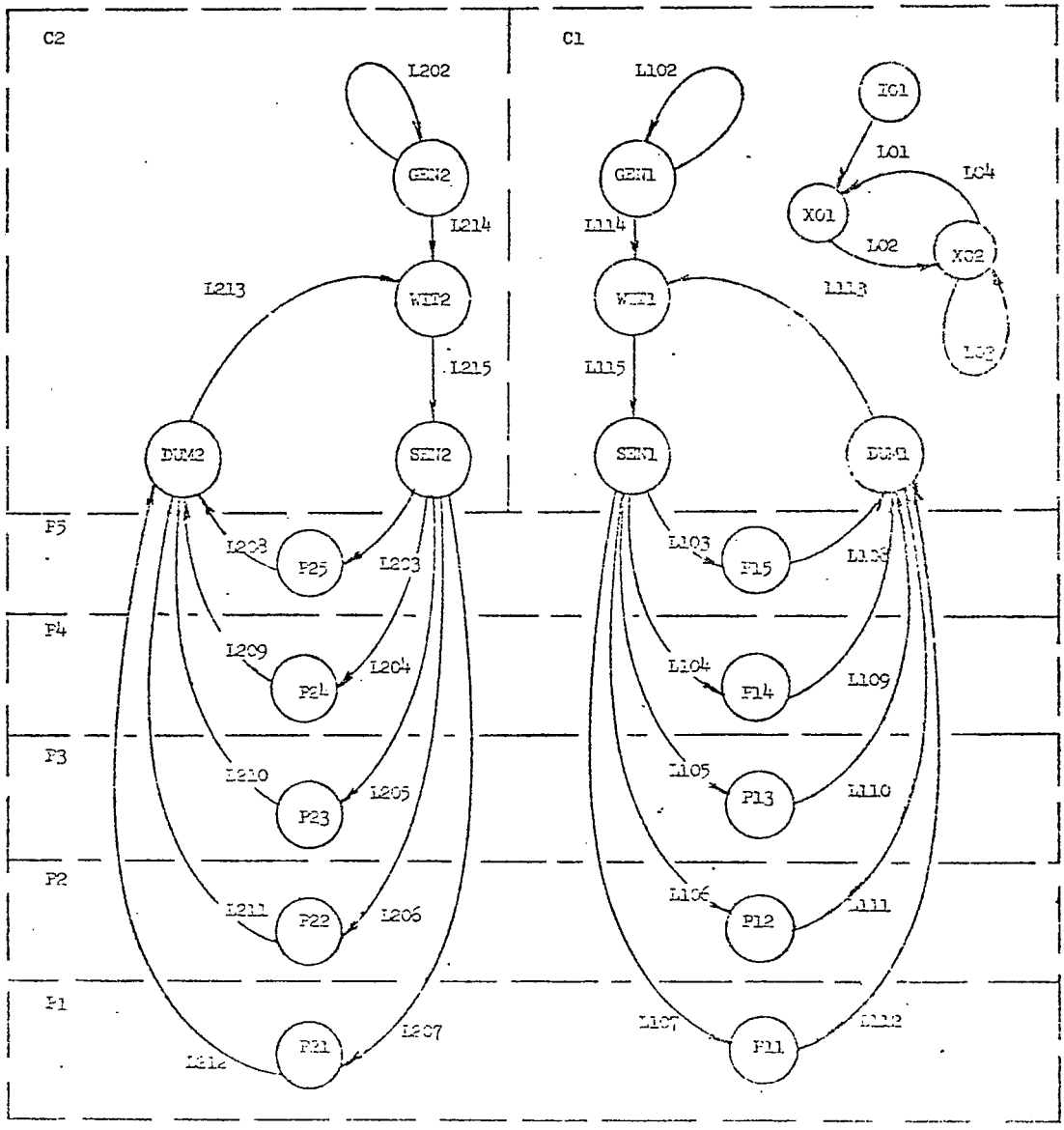

Figure 6.3. Model representation, $\mathcal{M}$, of the Discrete Process.

The system is made up of seven subsystems. There is a subsystem representing each of the five ports and a subsystem for each of the two processors. All subsystems are specified as "hardware" or the multiplicity of activity function level. The system states in each port subsystem which correspond to Processor 1 accessing the port have higher priority than the corresponding Processor 2 system states.

6.4.2 Interlock

The model representation for the interlock scheme is also shown in Figure 6.3. The only difference between this and the preceding interrupt description is simply that the five subsystems representing the five ports are now specified as "software", and all access steps have the same priority. The software specification, of course, enforces singularity of activity within its subsystem. Activity of system states within these five subsystems will be on a first come first serve basis. If two system states in the same subsystem attempt to become active simultaneously, however, the system state model construct will resolve the conflict. Simply by ordering the model input parameters such that Processor 1's "memory access" system state follows the corresponding Processor 2's "memory access" system state, the Processor 1's system state will take local precedence over the other. For example, as shown in Appendix G the order for system state P25 will have a lower rank than P15, and P15 will have precedence if the two system states attempt to become active at the same instant. Refer to Appendix A for a description of rank in software subsystems.

6.5 Dynamic Model

Outputs from the model runs (shown in Appendix G) typically would be used in the study of real systems. It is a simple matter to

determine the total memory accesses or "throughput" as a function of the number of ports and the precedence scheme. The amount of time which one processor or the other spends waiting to enter a port may also be of interest. The output shown covers an unrealistically brief period of time due to space limitations in the Appendix. The method presented here, however, could be the basis for meaningful statistical and analytic comparison if the system were simulated over realistic time frames.

6.6 Example Results

This example demonstrates the ease of specifying a discrete process in terms of the basic system state model parameters. Very little additional program logic is required. The amount of time which the processors spend either waiting to access the memory, or suspended while in the process of accessing the memory could readily be determined. In the interest of simplicity, this example involved only two processors. Figure 6.4 shows the percentage of time which each processor actually spent waiting for interrupt and for interlock. However the situation of many processors accessing a common data base can easily be visualized. The same considerations in using the system state model would apply in representing interlock or interrupt schemes with the additional processors. The example assumed that all memory ports would use the same precedence scheme. The system could just as easily be modeled based on interrupt in some ports and interlock in others. All that need be changed, of course, is simply the system state model input order which determines whether the subsystem which represents the ports will be "hardware" or "software".

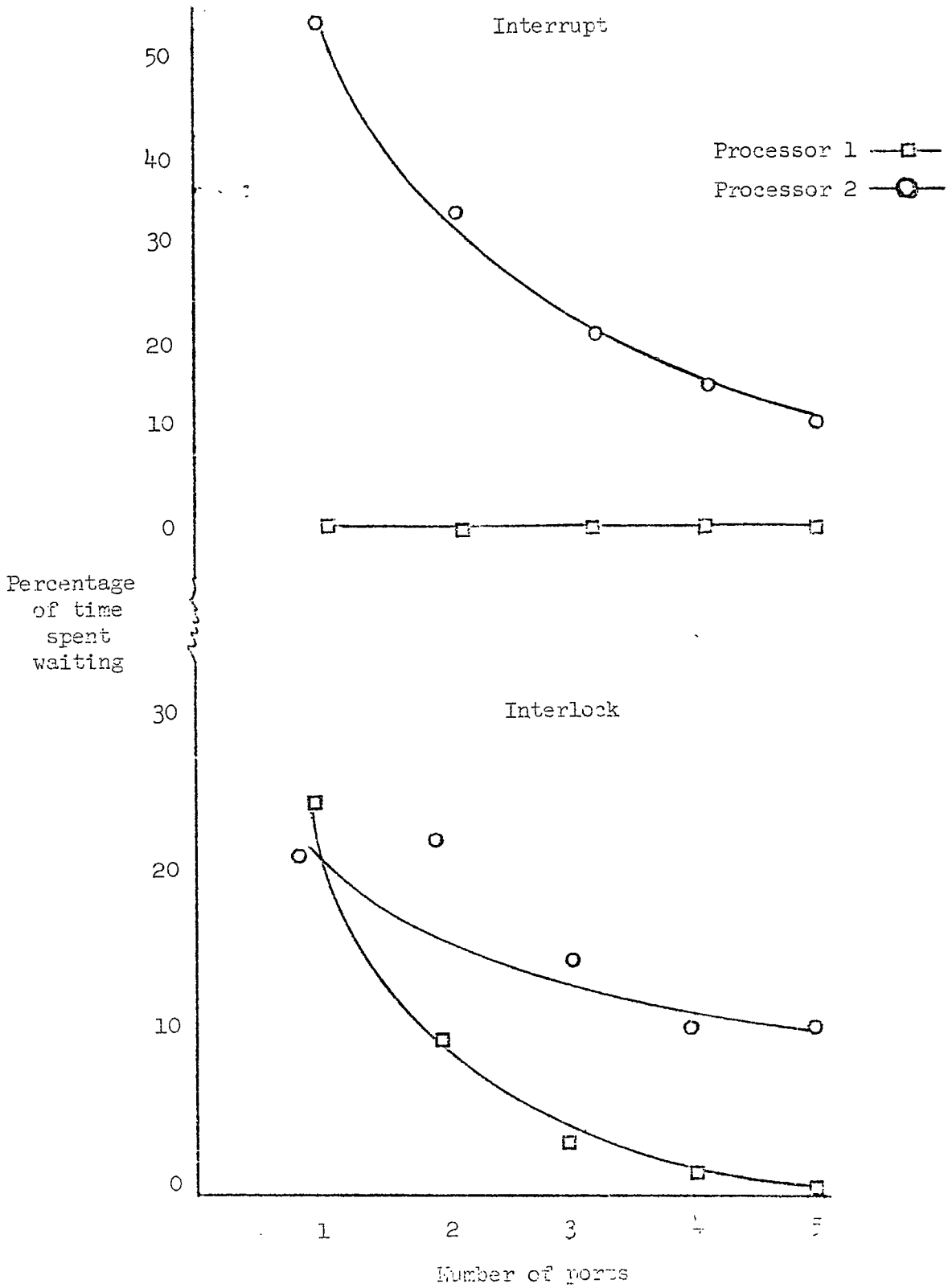

Figure 6.4 Percentage waiting time for each processor

6.7 General Conclusion

The discrete process chosen in this example had a very straight forward model representation. There are many discrete physical systems whose activity is primarily based on resolving rules of precedence. For straightforward schemes analogous to Interrupt and Interlock and their combinations, the system state model is readily applicable. The use of the model could facilitate instruction in courses relating to the design of telecommunications systems. The model construct which allows the user to specify subsystems as "hardware" or "software", automatically effects logic which would otherwise require considerable specificity at a microscopic level.

7. QUEUEING SYSTEM

7.1 Introduction

There are many systems of interest which can be described primarily in terms of a queueing discipline. They range from the simple physical situation of people in a single waiting line being served on a first come first serve basis, to situations having complex relationships between multiple queues and between the entities within each queue. Queueing problems involve discrete processes and are a favorite target of discrete simulation languages such as GPSS (General Purpose System Simulator). Many fields of engineering place considerable emphasis on problems of this type which are common in many manufacturing, inventory, distribution, and transportation systems.

7.2 Example System

This example will model a hypothetical system shown schematically in Figure 7.1. The entities in the queues will be referred to as "jobs" although they could be thought of simply as "transactions", objects", or other descriptive terms. In general they could be jobs in a job shop, goods in a transportation and distribution system, parts in a manufacturing plant or students in a registration sequence. The system will involve more than simple queueing discipline. The "queue" by definition is simply a waiting line in which jobs are served on a first come first serve basis. However, the term "queueing" is sometimes loosely used to apply to processes with very complex serving algorithms. For example, the jobs may be served on the basis of some priority which is implied in the process or on the basis of the expected serving time. The term "queue" will be used in this example in its looser sense to indicate a waiting situation which may inclule refinements in addition to first

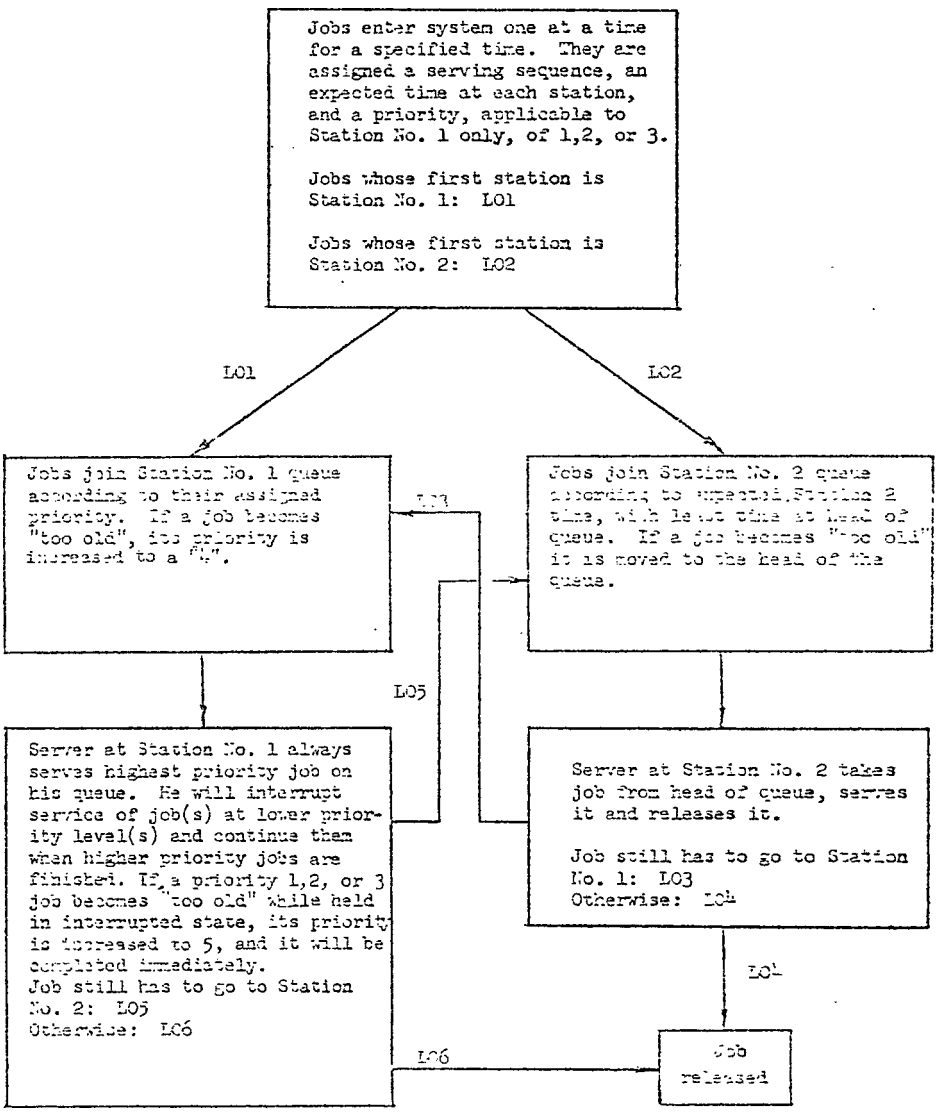

Figure [illegible]. [illegible] of the "[illegible]" [illegible].

come first serve considerations. The system consists simply of two serving stations each with its associated queues and queueing discipline. Each job which enters the system visits each station once and only once and then leaves the system. When each job enters the system, it is assigned a priority of 1, 2, or 3 applicable to Station 1. It also is assigned its expected time at each station, and its first station is designated. It is assumed that half the jobs visit Station 2 and then Station 1, and the other half of the jobs, of course, are visiting the two stations in the opposite sequence. The serving of jobs at Station 1 will be primarily according to the priority which they were assigned when they entered the system. A job with priority 3 will actually interrupt the serving of a job of priority 2 or 1 and complete its service time at Station 1 while the lower priority job is "suspended". The interrupted job at the lower priority level, of course, would continue to be served after the higher priority job leaves the server. It is also assumed that the age of the jobs must be considered. If a job in the Station 1 queue becomes "too old" it will be assigned a priority of 4. This will allow it in effect to move to the head of the line and interrupt the serving of any job which is not yet too old. In addition to scanning the Station 1 queue for jobs which are too old, the system will also check the age of interrupted jobs at priority level 3, 2, and 1. A job may become too old at the service station itself due to continual interruption by higher priority jobs. If such a job is found, it is assigned a priority level 5 which then allows it to finish being served.

The jobs at Station 2 are served according to the expected Station 2 time. The jobs with the least time are served first. Here again the age of jobs in the queue is checked. If a job is found "too

old" it is moved to the head of this queue. Once moved because of age, a job is flagged to prevent future repositioning in the queue should other jobs become too old. As soon as a job leaves its first station, it goes immediately to the queue of its second station; and as soon as it leaves its second station, it disappears from the system. The system will allow jobs to be generated for 120 minutes. After this time no new jobs will enter the system. The system will continue to function, however, until all jobs are fully processed and released.

7.3 Formal System, $\mathcal{S}$

The system is formalized as shown in Figure 7.2. The first block simply generates jobs. This block consists only of the "start" step which initiates activity and the generate step which continues to generate jobs until an arbitrary time limit is reached. Each job has associated with it a unique number, the time at which it was created, its priority at service Station 1, its expected time at each station, and the first station to which it will be routed. The jobs are numbered sequentially as they are created, the priority is either 1, 2, or 3 with equal probability. Approximately half of the jobs will visit Station 1 first. The time between job arrivals is assumed to be a random value from an exponential distribution. The expected job times are assumed to be random values from normal distributions.

There is a block which represents the queue associated with service Station 2. It includes steps which reflect new jobs joining the queue and existing jobs joining the queue after they complete processing at Station 1. There are also steps which check the queue for jobs which are too old and reposition jobs in the queue if required.

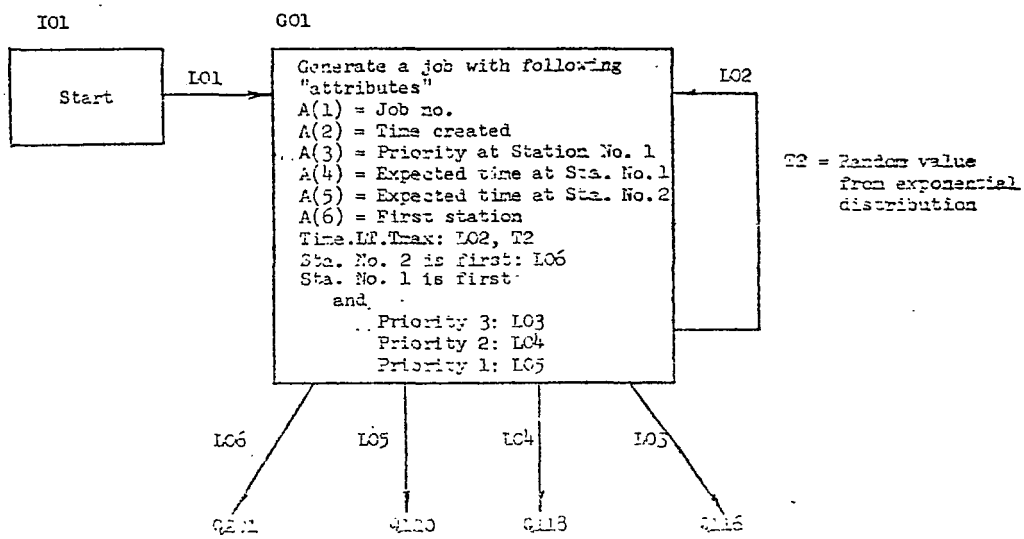

Figure 7.2.1. The Generate block of the queueing system. Times associated with L03 through L06 are unity

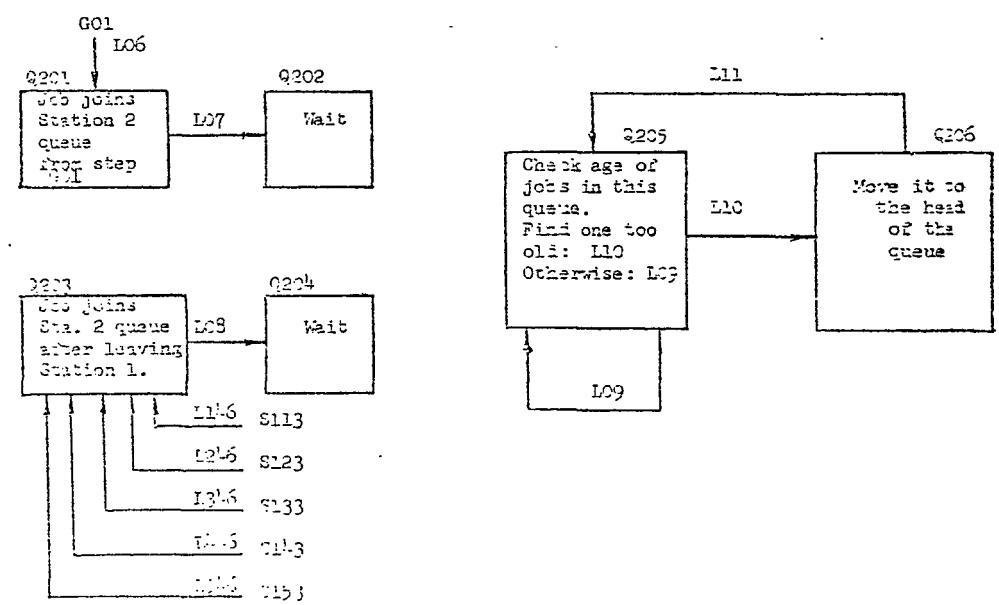

[illegible]

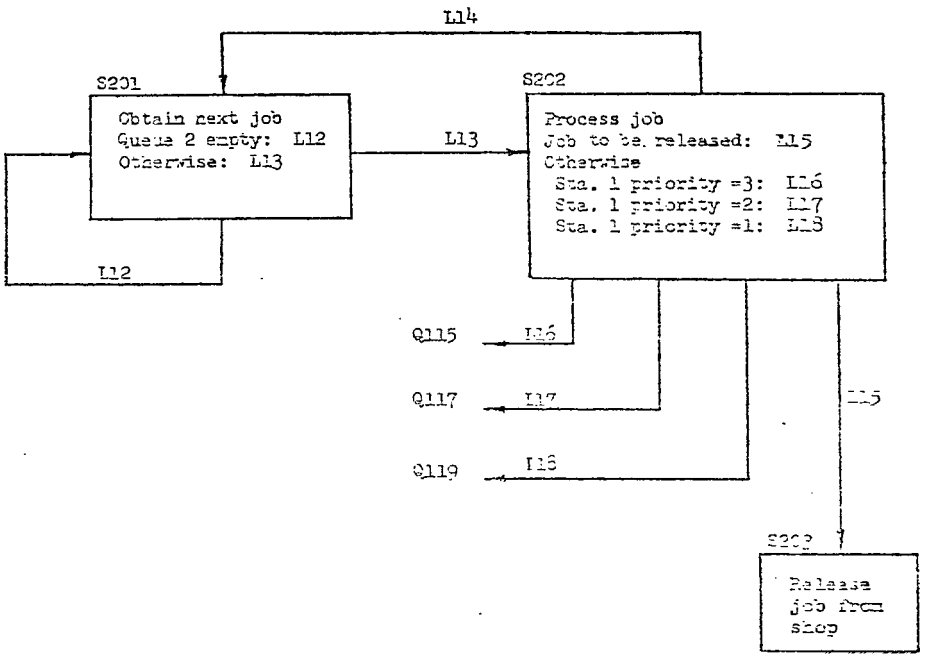

Figure 7.2.3. The Station No. 2 block. The step S202 consumes an amount of time equal to the expected job time (attribute A(5)) for each job.

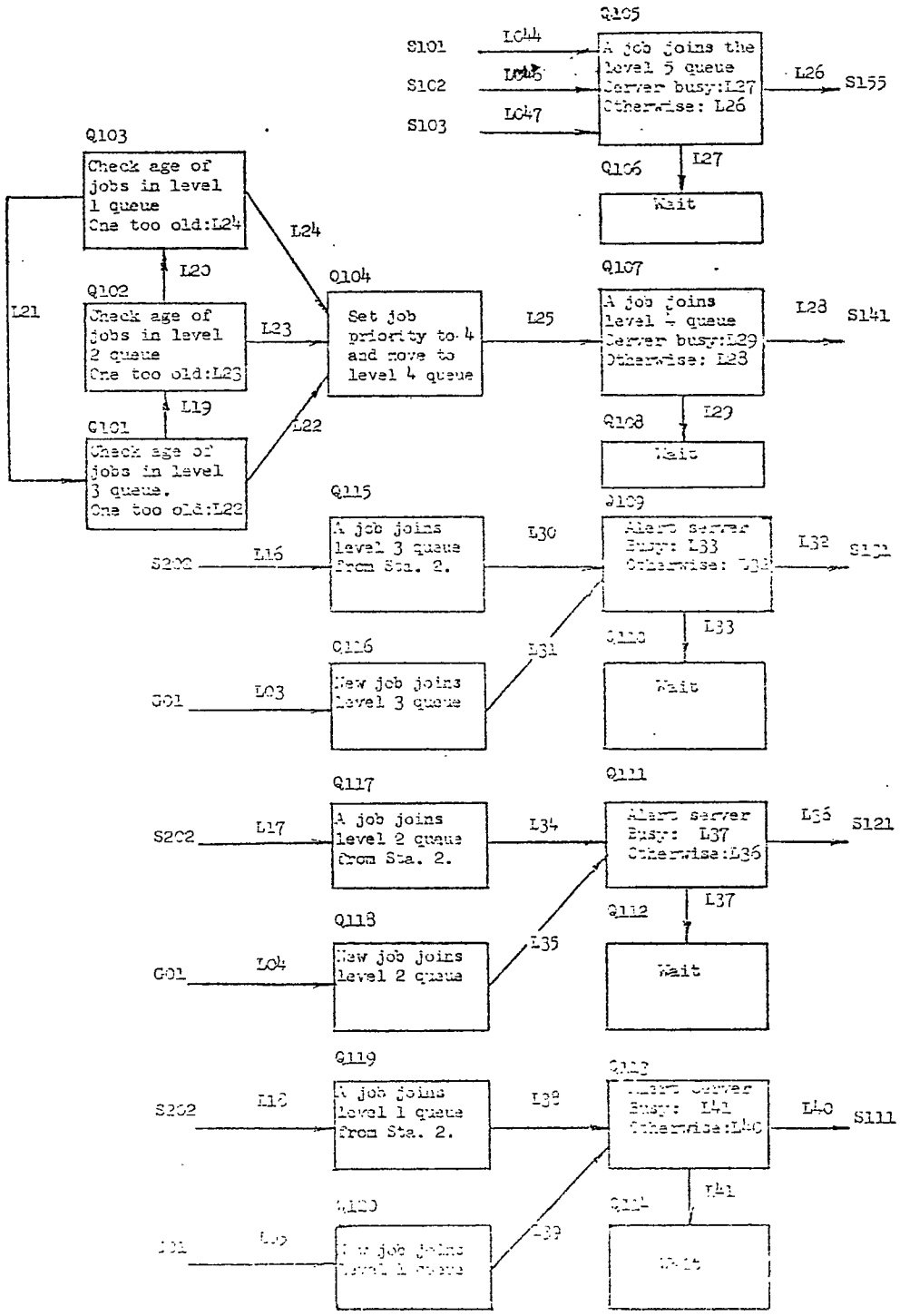
Q105
S101
L044
A job joins the level 5 queue Server busy:L27 Otherwise: L26
L26
S155
S102
L045
S103
L047
Q106
L27
Wait
Q103
Check age of jobs in level 1 queue One too old:L24
L24
L20
Q102
Check age of jobs in level 2 queue One too old:L23
L21
L23
Q104
Set job priority to 4 and move to level 4 queue
L25
Q107
A job joins level 4 queue Server busy:L29 Otherwise: L28
L28
S141
L19
Q101
Check age of jobs in level 3 queue. One too old:L22
L22
Q108
L29
Wait
Q115
A job joins level 3 queue from Sta. 2.
L30
Q109
Alert server Busy: L33 Otherwise: L32
L32
S121
S200
L16
Q110
L33
Wait
Q116
New job joins level 3 queue
L31
G01
L03
Q117
A job joins level 2 queue from Sta. 2.
L34
Q111
Alert server Busy: L37 Otherwise:L36
L36
S121
S202
L17
Q112
L37
Wait
Q118
New job joins level 2 queue
L35
G01
L04
Q119
A job joins level 1 queue from Sta. 2.
L38
Q113
Alert server Busy: L41 Otherwise:L40
L40
S111
S202
L18
L41
Q114
L39
Wait

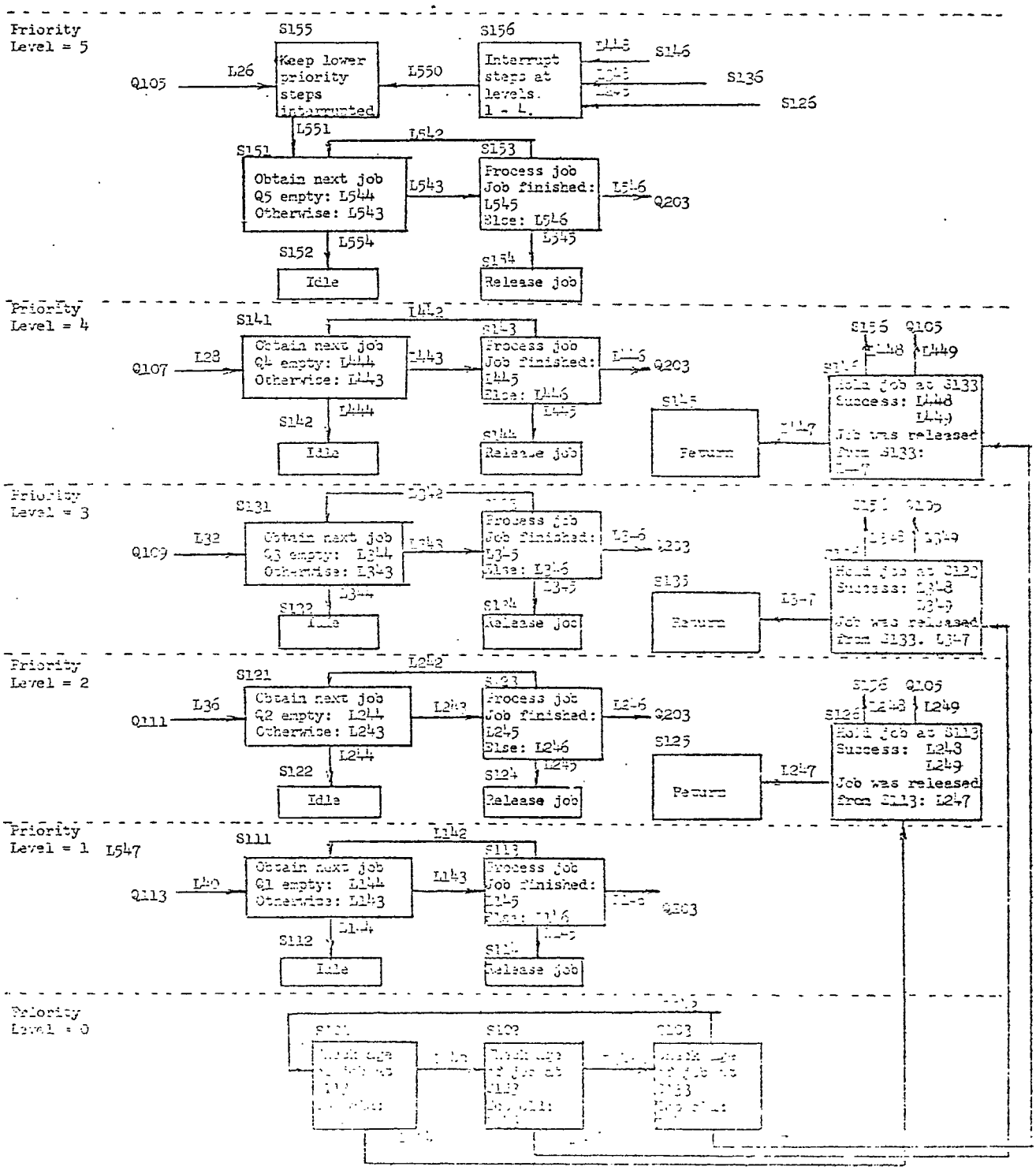
Priority Level = 5
S155
Keep lower priority steps interrupted
S156
Interrupt steps at levels. 1 - 4.
Q105
L26
L550
S146
S136
S126
L551
L542
S151
Obtain next job Q5 empty: L544 Otherwise: L543
L543
S153
Process job Job finished: L545 Else: L546
L546
Q203
L545
S152
Idle
S154
Release job
Priority Level = 4
S141
Obtain next job Q4 empty: L144 Otherwise: L143
Q107
L28
L142
L143
S143
Process job Job finished: L145 Else: L146
L146
Q203
L145
S142
Idle
S144
Release job
S145
Return
L147
S156
Q105
L148
L149
S133
Hold job at S133 Success: L148 L149 Job was released from S133: L147
Priority Level = 3
S131
Obtain next job Q3 empty: L344 Otherwise: L343
Q109
L32
L342
L343
Process job Job finished: L345 Else: L346
L346
Q203
L344
S132
Idle
S134
Release job
S135
Return
L347
S123
Hold job at S123 Success: L348 L349 Job was released from S133. L347
Priority Level = 2
S121
Obtain next job Q2 empty: L244 Otherwise: L243
Q111
L36
L242
L243
S123
Process job Job finished: L245 Else: L246
L246
Q203
L244
S122
Idle
S124
Release job
S125
Return
L247
S126
Q105
L248
L249
S113
Hold job at S113 Success: L248 L249 Job was released from S113: L247
Priority Level = 1
L547
S111
Obtain next job Q1 empty: L144 Otherwise: L143
Q113
L40
L142
L143
S113
Process job Job finished: L145 Else: L146
Q203
L144
S112
Idle
S114
Release job
Priority Level = 0
S101
S102
S103

The Station 2 block represents the activity of the Station 2 server itself. The server simply obtains a job from the head of queue 2, processes it without interruption, and then obtains the next job. If queue 2 is empty, the server will continually check for the next arrival. The step corresponding to the processing of the job consumes an amount of time equal to its expected time which was associated with this job when it was "generated". At the conclusion of this processing, the job is released if this was its second station or routed to the appropriate priority level for servicing at Station 1 if it has not yet visited that station.

The block which represents the Station 1 queue is somewhat more complicated due to the constraints of priority. The system is conceptualized such that this block includes, first of all, three separate queues, one for each of the three possible initial values of priority. These three queues may have jobs join them from either Station 2 or the generate step. (G01 of the generate block). In addition to the steps representing these three queues, there are steps which check the age of jobs in the three queues. If a job is found which has become too old, its priority is set to 4, and it is moved to a level 4 queue. The only source of level 4 jobs is the level 3, 2, and 1 queues. There are also steps which represent a level 5 queue. This queue is fed only by jobs which have become too old while being held suspended at the level 3, 2, or 1 service station.

The block corresponding to service Station 1 includes steps which represent activity at five different priority levels. The first three of these levels correspond to the original priority which jobs were assigned, namely 3, 2, or 1. The level 4 server handles the jobs

which became too old in the queues which fed the level 3, 2, and 1 servers. The level 5 server handles the jobs which became too old at levels 3, 2, or 1 while they were held suspended by the processing of higher priority jobs. In addition to these five exclusive priority levels, there is continuous activity at a lower inclusive level. (The system state model construct allows a system to be formalized along these lines through the conceptualization of a priority level of 0. Activity within the priority level 0 may continue regardless of any other activity in the block.) The steps at priority level 0 simply involve checking the age of jobs at the levels 3, 2, and 1 servers. If a job is found at one of these levels which is "too old" and which is not being processed due to activity at a higher level, it will be moved to the level 5 queue. When the server at level 5 obtains this job, pending activity at the job's original level will be superseded and the job's processing time at level 5 will be only its residual processing time at the original level. For example, suppose Job No. 13 of expected time 6 minutes is being processed at level 2. If it is processed for 2 minutes and then interrupted due to activity at level 3 until it becomes "too old", it would be transferred to level 5. Its processing time at level 5, however, will now be 4 minutes.

All blocks are conceptualized as "hardware" since there exists a multiplicity of activity. All cycle times are unity and in general the time for all steps to complete is unity. Of course, the processing steps at Station 1 and 2 consume the expected times which were generated with each job for the respective stations.

7.4 Model Representation, $\mathcal{M}'$

The model representation $\mathcal{M}'$ is shown in Figure 7.3. It is a

direct transformation of the formal system $\mathcal{S}$. The generate subsystem, GEN, simply generates jobs at intervals determined by an exponential distribution. This is accomplished by specifying the transition time for transition LO2 to be a value obtained from an integer function. The function simply includes an appropriate call to subroutine ATIME to obtain a random value from the exponential distribution. (Refer to Appendix B for Random Variable Generator.) When the transition LO2 completes, a transformation is invoked which generates and records the required job attributes. The complete information concerning the job is then stored in an array which may be thought of as the system inventory.

The subsystem representing queue 2 includes transformations which record the arrival of jobs and which rearrange the queue if jobs are found to be too old. The arrival of jobs from two separate sources is accounted for by transformations associated with the emanating transitions of separate system states. Separate system states (Q201 and Q203, Figure 7.3.1) eliminate the possibility of collisions which would cause "lock out" at a single EXCLUSIVE OR system state if two jobs arrive simultaneously. Collisions, of course, would occur if an existing job and a new job arrived at the same instant. The system state Q203, which corresponds to "job joins queue 2 after leaving Station 1", also has five terminating transitions and EXCLUSIVE OR input logic. There can never be a collision in this case, however, since these five transitions emanate from mutually exclusive priority levels in another subsystem.

The Station 2 subsystem is also quite straightforward and transformations are used to record the server taking jobs from the

Figure 7.3.1 Legend

Subsystem	Cycle Time	Function Level
STA2,GEN, Q2	1	Multiplicity of Activity

System State	Priority	Input Logic
I04	0	⊖
All others	1	⊖

Transition	Condition	Time	Transformation
L01	TRUE	0	
L02	Time.LE.120	Exponential R.V.	Create a job complete with attributes
L03	Job goes first to Sta.1. at priority 3	1	Place job on queue for Sta.1.,level 3
L04	Job goes first to Sta.1. at priority 2	1	Place job on queue for Sta.1.,level 2
L05	Job goes first to Sta.1. at priority 1	1	Place job on queue for Sta.1.,level 1
L06	Job goes first to Sta.2.	1	Place job on queue for Sta.2.
L07,L08	TRUE	1	
L09	No jobs in Sta.2 queue too old	1	Move thru job to head of the queue and flag it "too old"
L10	One job in Sta.2 queue too old	1	
L11	TRUE	1	

L146,L246,L306 } See Figure 7.3.3
L446,L546

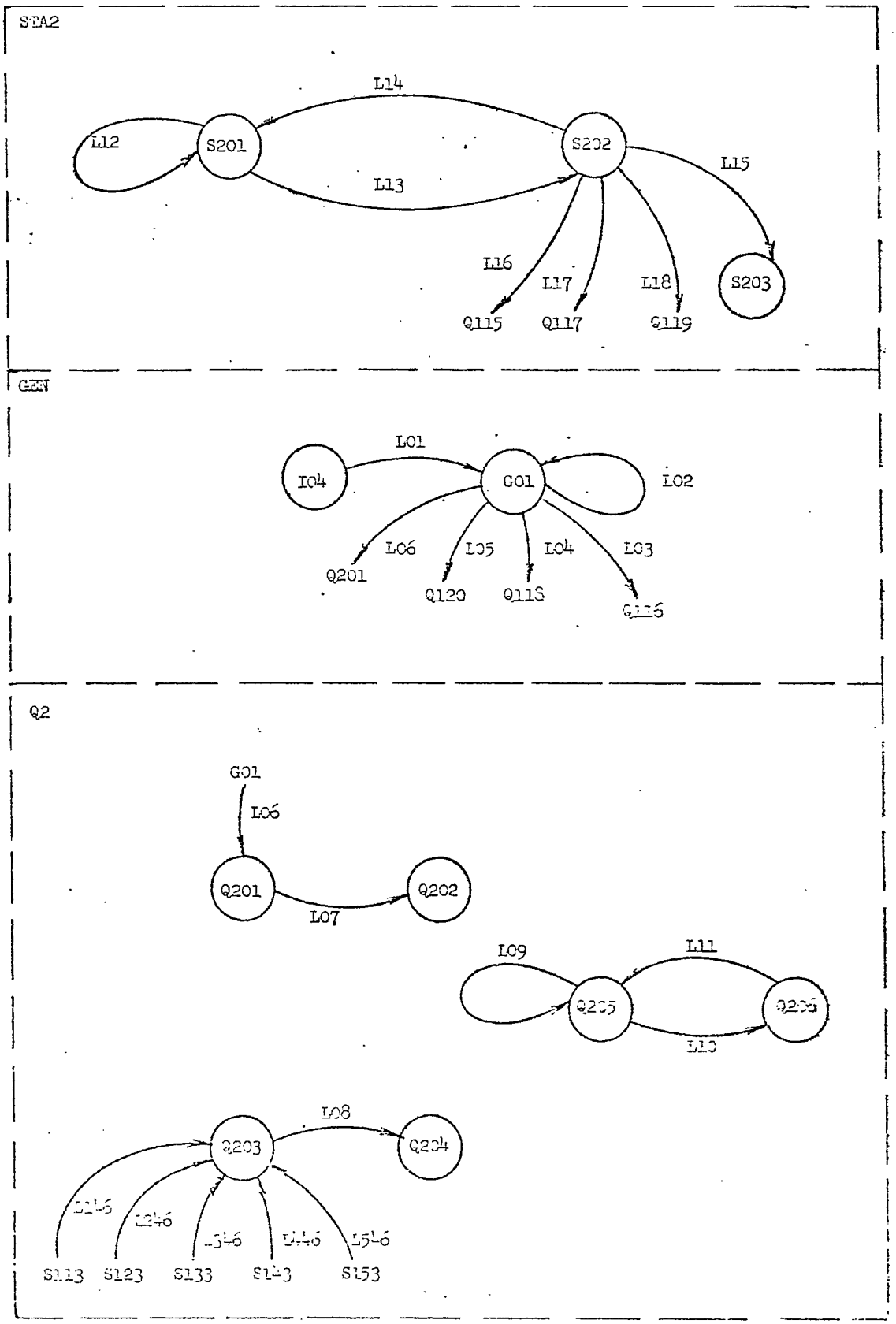

Figure 7.3.1. Subsystems STA2, GEN and Q2

queue. Upon completion, they are sent either to Station 1 or released from the system. The act of releasing a job involves erasing its record from the "inventory" array.

The subsystem representing queue 1 includes activity at priority level 0. The system states at level 0 correspond to the steps which check the age of jobs in the queues. To avoid possible conflict at step Q109 which alerts the level 3 server, recourse is made to the use of different priority levels. Since the server is to be alerted when either a new job joins the queue or a job from Station 2 joins the queue and EXCLUSIVE OR input logic is specified for system state Q109 (Figure 7.3.2), it is possible for "lock out" to occur at Q109. If system states Q115 and Q116 were to become active simultaneously, their emanating transitions would complete simultaneously. Then the EXCLUSIVE OR input logic would prevent system state Q109 from being entered. By assigning Q115 and Q109 a priority 2 and leaving Q116 at priority = 1, this "lock out" cannot occur. Now if Q115 and Q116, which correspond to jobs joining the queue from two separate sources, attempt to become active simultaneously, Q116 will be held in priority wait. While it is in priority wait, Q115 which corresponds to a job joining the queue from Station 2, will complete its activity. Then and only then will system state Q116, corresponding to the new job joining the queue, become active. It will complete its activity and again, if appropriate, the server will be alerted. Similar reasoning leads to assigning priority 2 to corresponding system states associated with the level 2 queue and the level 1 queue. (The involved system states are Q117, Q111, Q119, and Q113 in Figure 7.3.2). The input logic to system state

Figure 7.3.2 Legend

Subsystem	Cycle Time	Function Level
Q1	1	Multiplicity of Activity

System State	Priority	Input Logic
Q101,Q102,Q103, Q104,Q107,Q108	0	⊖
Q109,Q111,Q113, Q115,Q117,Q119	2	⊖
All others	1	⊖

Transition	Condition	Time	Transformation
L19,L20,L21	TRUE	2	Print "snapshot" of system
L22	A job too old in level 3 queue	1	Move it to level 4 queue, Q14.
L23	A job too old in level 2 queue	1	Move it to level 4 queue, Q14.
L24	A job too old in level 1 queue	1	Move it to level 4 queue, Q14.
L25	TRUE	1	
L30,L31,L34, L35,L38,L39	TRUE	1	
L26	Level 5 server idle	1	Indicate Level 5 server busy
L27	Level 5 server busy	1	
L28	Level 4 server idle	1	Indicate Level 4 server busy
L29	Level 4 server busy	1	
L32	Level 3 server idle	1	Indicate Level 3 server busy
L33	Level 3 server busy	1	
L36	Level 2 server idle	1	Indicate Level 2 server busy
L37	Level 2 server busy	1	
L40	Level 1 server idle	1	Indicate Level 1 server busy
L41	Level 1 server busy	1	

L16,L17,L18
L03,L04,L05 } See Figure 7.3.1

L044,L046,L047 See Figure 7.3.3

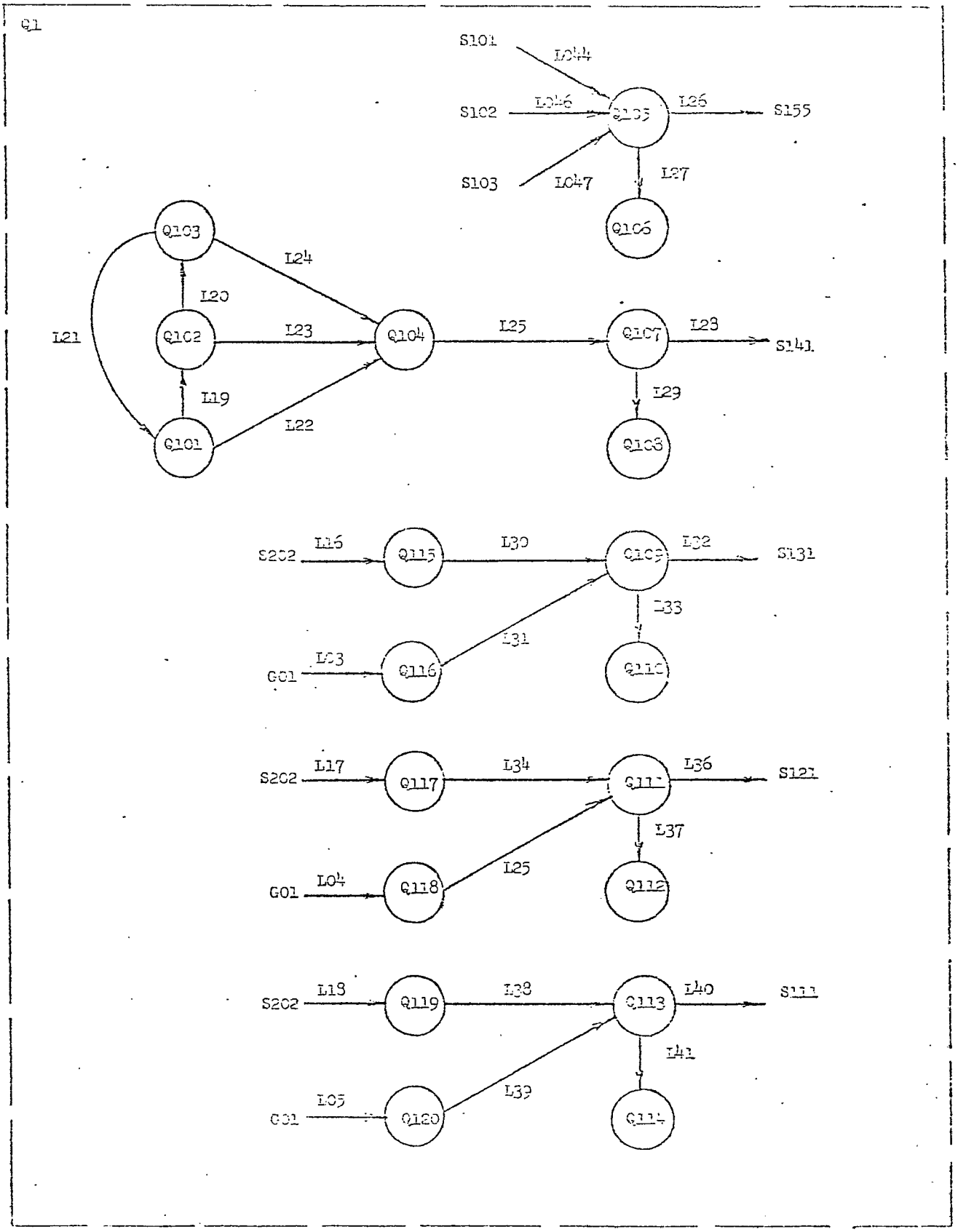

Figure 7.3.2. Subsystem Q1

Q105 which corresponds to the step "A job joins level 5 queue" is also EXCLUSIVE OR. Even though this system state has three terminating transitions, there will never be a collision of inputs because the transitions emanate from three mutually exclusive priority levels in a separate subsystem.

The system which represents Station 1 is the most complex subsystem of the model. It includes system states which directly correspond to the steps shown in Figure 7.2.5. There are five mutually exclusive priority levels, 1 through 5, and there is also activity at level 0 which proceeds independently of the other levels. The level 0 activity checks the age of the jobs at the levels 3, 2, and 1 "process" system states. Suppose, for example, system state S102 which corresponds to the step "Check age of job at level 2" discovers that job is too old. Transition L046 will be taken which terminates at system state S136 and whose function is simply to temporarily prevent further level 2 activity. It is possible that in the same "instant" of time transition L046 completed, the job may have been finished and released. Obviously, if such an event occurred there would be no need to move the job. Therefore, the logic of the emanating transitions from system state S136 is dependent upon whether that job was actually held at the lower level. If it "got away" the transition L347 is simply taken and the model ignores a job already released. If, however, it is found that the job is still held at level 2, it will be moved to level 5 to assure its processing with a minimum of additional delay. Transition L348 which terminates at a level 5 system state will become active and level 5 is entered. Processing at lower levels is suspended. Another transition, L349, will become active, and it will invoke a transformation which

Figure 7.3.3 Legend

Subsystem	Cycle Time	Function Level
STA1	1	Multiplicity of Activity

System State	Priority	Input Logic
S101,S102,S103	0	⊖
S111,S112,S113,S114	1	⊖
S121,S122,S123,S124,S125,S126	2	⊖
S131,S132,S133,S134,S135,S136	3	⊖
S141,S142,S143,S144,S145,S146	4	⊖
S151,S152,S153,S154,S156	5	⊖
S155	5	•

Transition	Condition	Time	Transformation
L042,L043,L045	TRUE	1	
L044	Job at Level 1 Process step too old and is currently interrupted	1	
L046	Job at Level 2 Process step too old and is currently interrupted	1	
L047	Job at Level 3 Process step too old and is currently interrupted	1	
L247,L347,L447	The job original found to be too old and interrupted, was released	1	
L248,L348,L448	The job originally found to be too old was held at its "process" system state	1	
L249,L349,L449	The job originally found to be too old was held at its "process"system state	1	Move the job to the Level 5 queue.
L141,L241,L341, L441,L541	The queue feeding the appropriate server level was empty	1	Indicate appropriate server level i
L143,L243,L343 L443,L543	The queue feeding the appropriate server level was not empty	1	Take job from appropriate queue and start processing
L142,L242,L342, L442	TRUE	Sta.1 process time	
L542	TRUE	Residual Sta. 1 process time which remained at original serving level	
L146,L246,L346 L446,L546	Job leaving the appropriate Sta. 1 level has not yet visited Sta.2	Sta. 1 process time (Residual time for L546)	Send job to Sta.2 queue
L145,L245,L345 L445,L545	Job leaving the appropriate Sta.1 level has already visited Sta.2	Sta. 1 process time (Residual time for L546)	Remove job from system
L550,L551	TRUE	1	
L547	It was a level 1 job which was too old	1	
L548	It was a level 2 job which was too old	1	
L549	It was a level 3 job which was too old	1	

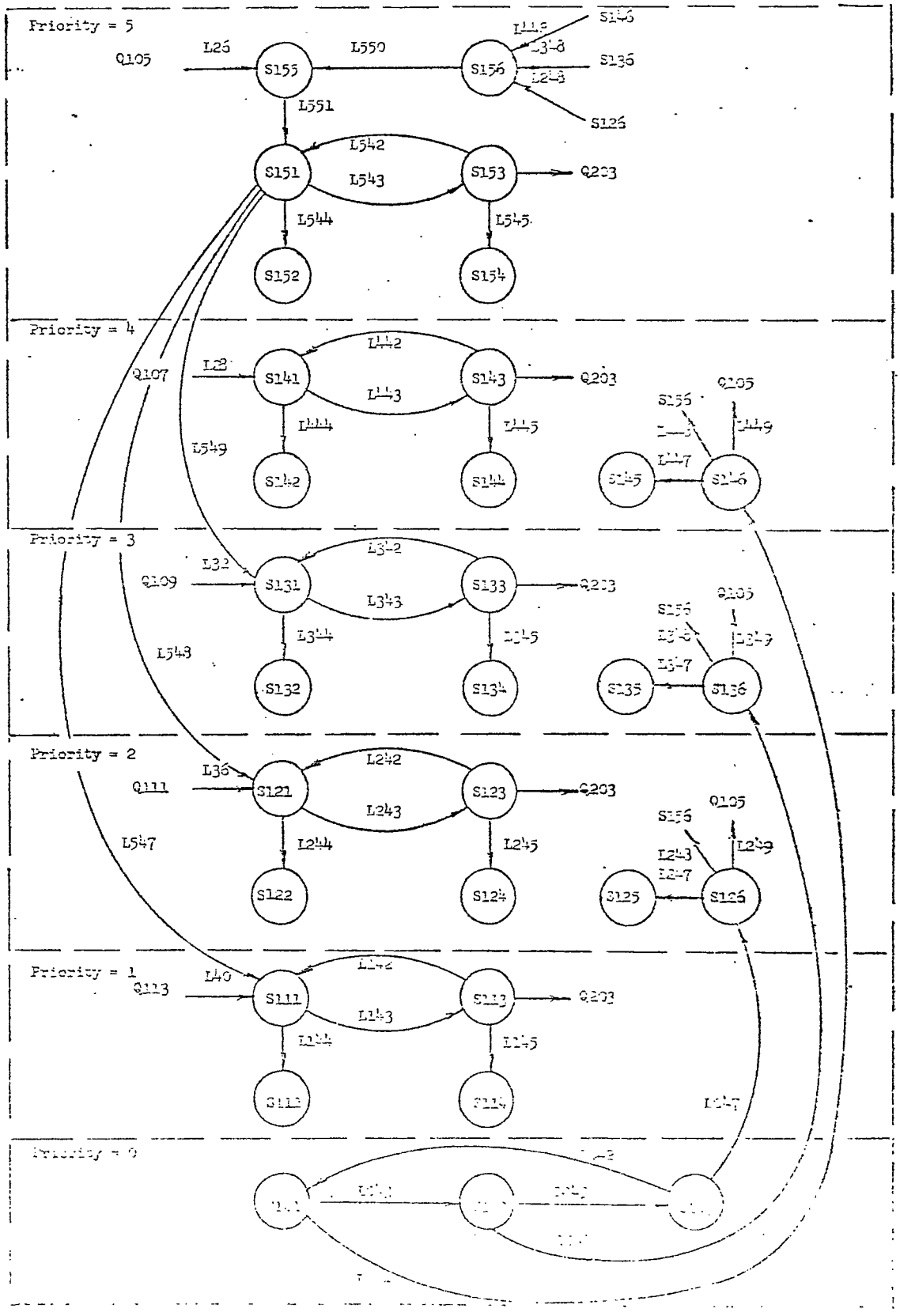
Priority = 5
Q105
L26
S155
L550
S156
S136
S126
L551
S151
L542
L543
S153
Q203
L544
L545
S152
S154
Priority = 4
Q107
L28
S141
L142
L143
S143
Q203
Q105
L549
S142
S144
S145
S146
Priority = 3
Q109
L32
S131
L342
L343
S133
Q203
Q105
L543
S132
S134
S135
S136
Priority = 2
Q111
L36
S121
L242
L243
S123
Q203
Q105
L547
S122
S124
S125
S126
Priority = 1
Q113
L40
S111
S113
Q203
S112
S114
Priority = 0

places the job in question on the level 5 queue. The job on the level 5 queue, of course, will be obtained and served at level 5 without interruption. When system state S151, which corresponds to "obtain the next job" at level 5 becomes active, it will not only initiate processing at that level, but it will supersede the original interrupted activity at level 1. This is accomplished by transition L548 which emanates from system state S151 and terminates to system state S121. The act of supersedence, as currently implemented by the system state model, proceeds as follows: Completion of the transition from the higher priority level system state (S151) to the lower priority level system state (S121) causes all pending activity at the lower level to be erased by setting all residual transitions times at that level to zero. The system state to which the higher level transition (L548) terminates will then become active.

For the example mentioned above, suppose at job No. 18 originally being processed at level 2 had an expected time of 8, and had processed for 3 minutes before interruption by, say, a priority 3 job. The residual transition time for the active emanating transitions of the "process job" system state (S123) will be 5 when supersedence occurs. The residual transition time of these transitions will be set to zero. Conceptually, the job has "disappeared" from the "process" step. The system state which was reached from the higher, superseding level, then becomes active. For this example, it would be S121, corresponding to "obtain next job". The level 2 server will not "remember" the pending activity, corresponding to the processing of job No. 18. The level 2 server will simply make a "fresh start" and obtain the next job on the queue.

7.5 Dynamic Model

Jobs were created up until time = 120 which corresponded to two hours of real time. Every two time cycles, a complete snap shot of the system was printed out. In addition to this print out, the inventory was shown after the creation of each job and after the release of each job. The snap shot included the job number and expected time of the job currently served at Station 2 and currently served (or interrupted) at each priority level of Station 1. The contents of all the queues were also shown. After model time exceded 120, the model continued to function until all jobs were finally released from the system. This occurred at time = 202. It should be noted that the configuration of the system in the snap shots is only a "fleeting glimpse" of what is actually going on. For example, a snap shot may show the system "at the beginning of time = 10", "at the end of time = 10", or some time "in the middle of time = 10". The activity of subsystem STA1 which reflects a job at Station 1 being moved to level 5 occurred at time = 72. A portion of the output is shown in Figure 7.4. As time = 72, job No. 8 is at the priority 3 serving station. It activity is suspended, however, by job No. 6 which is being served at the priority 4 level. When the next snap shot is printed at time = 74, job No. 8 has disappeared from priority level 3 server and reappeared at the priority level 5 queue. Although the job No. 8 expected time was originally shown as 9 minutes, its expected time at level 5 is shown as only 6 minutes. It had been processed for a total of 3 minutes before it was interrupted by level 4 activity. Figure 7.5 shows examples of the movement of jobs which have become too old in the queues. The snap shot at time = 42 shows job No. 2 on the priority 1 queue. At time = 44, however,

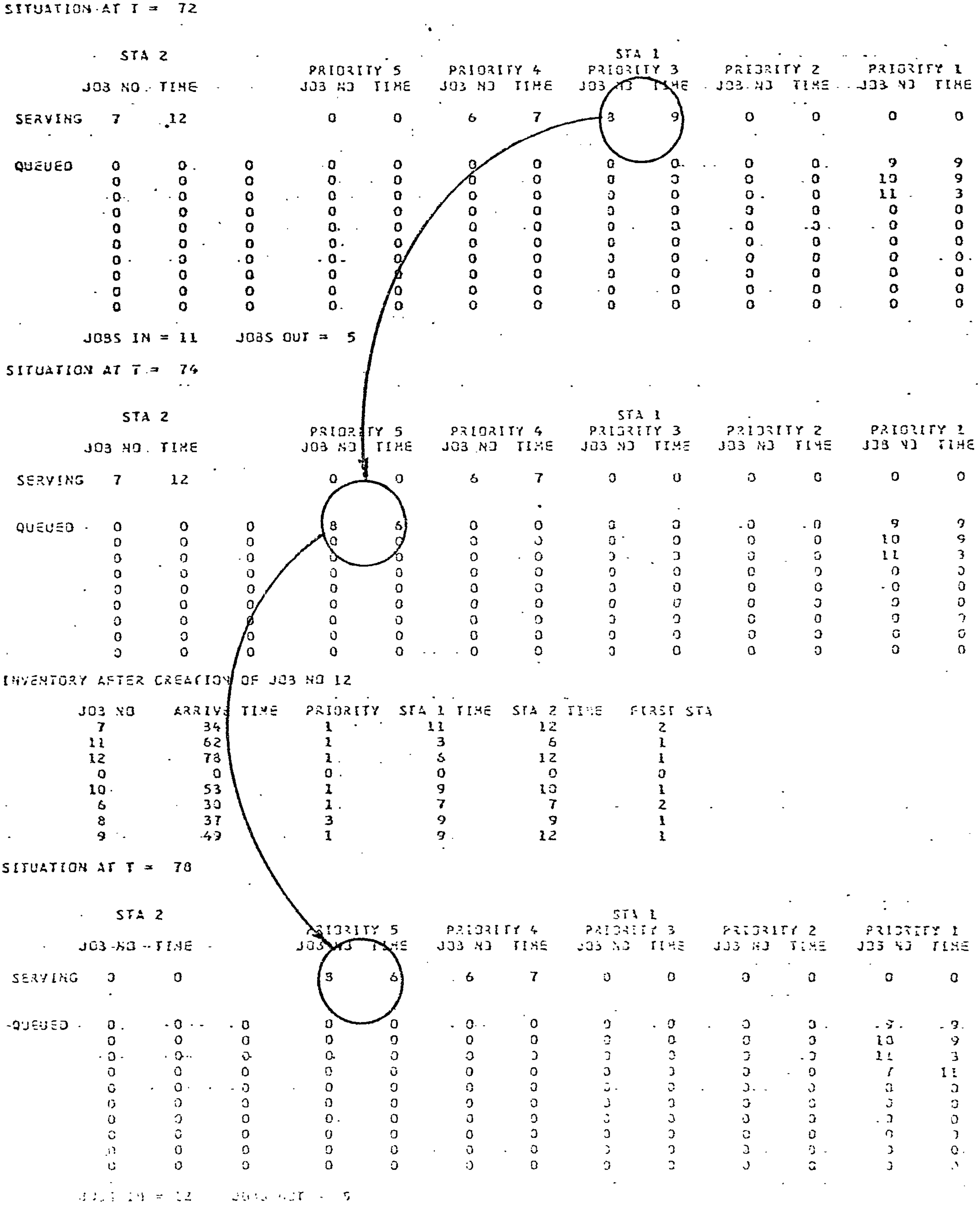

```
SITUATION AT T =  72

     STA 2                                                                STA 1
                              PRIORITY 5      PRIORITY 4      PRIORITY 3      PRIORITY 2      PRIORITY 1
     JOB NO  TIME             JOB NO  TIME    JOB NO  TIME    JOB NO  TIME    JOB NO  TIME    JOB NO  TIME

SERVING   7    12               0       0       6       7       8       9       0       0       0       0

QUEUED    0     0     0         0       0       0       0       0       0       0       0       9       9
          0     0     0         0       0       0       0       0       0       0       0      10       9
          0     0     0         0       0       0       0       0       0       0       0      11       3
          0     0     0         0       0       0       0       0       0       0       0       0       0
          0     0     0         0       0       0       0       0       0       0       0       0       0
          0     0     0         0       0       0       0       0       0       0       0       0       0
          0     0     0         0       0       0       0       0       0       0       0       0       0
          0     0     0         0       0       0       0       0       0       0       0       0       0
          0     0     0         0       0       0       0       0       0       0       0       0       0
          0     0     0         0       0       0       0       0       0       0       0       0       0

     JOBS IN = 11    JOBS OUT =  5
SITUATION AT T =  74

     STA 2                                                                STA 1
                              PRIORITY 5      PRIORITY 4      PRIORITY 3      PRIORITY 2      PRIORITY 1
     JOB NO  TIME             JOB NO  TIME    JOB NO  TIME    JOB NO  TIME    JOB NO  TIME    JOB NO  TIME

SERVING   7    12               0       0       6       7       0       0       0       0       0       0

QUEUED    0     0     0         8       6       0       0       0       0       0       0       9       9
          0     0     0         0       0       0       0       0       0       0       0      10       9
          0     0     0         0       0       0       0       0       0       0       0      11       3
          0     0     0         0       0       0       0       0       0       0       0       0       0
          0     0     0         0       0       0       0       0       0       0       0       0       0
          0     0     0         0       0       0       0       0       0       0       0       0       0
          0     0     0         0       0       0       0       0       0       0       0       0       0
          0     0     0         0       0       0       0       0       0       0       0       0       0
          0     0     0         0       0       0       0       0       0       0       0       0       0
INVENTORY AFTER CREATION OF JOB NO 12

     JOB NO     ARRIVE TIME     PRIORITY   STA 1 TIME    STA 2 TIME     FIRST STA
       7            34              1          11            12              2
      11            62              1           3             6              1
      12            78              1           6            12              1
       0             0              0           0             0              0
      10            53              1           9            10              1
       6            30              1           7             7              2
       8            37              3           9             9              1
       9            49              1           9            12              1
SITUATION AT T =  78

     STA 2                                                                STA 1
                              PRIORITY 5      PRIORITY 4      PRIORITY 3      PRIORITY 2      PRIORITY 1
     JOB NO  TIME             JOB NO  TIME    JOB NO  TIME    JOB NO  TIME    JOB NO  TIME    JOB NO  TIME

SERVING   0     0               8       6       6       7       0       0       0       0       0       0

QUEUED    0     0     0         0       0       0       0       0       0       0       0       9       9
          0     0     0         0       0       0       0       0       0       0       0      10       9
          0     0     0         0       0       0       0       0       0       0       0      11       3
          0     0     0         0       0       0       0       0       0       0       0       7      11
          0     0     0         0       0       0       0       0       0       0       0       0       0
          0     0     0         0       0       0       0       0       0       0       0       0       0
          0     0     0         0       0       0       0       0       0       0       0       0       0
          0     0     0         0       0       0       0       0       0       0       0       0       0
          0     0     0         0       0       0       0       0       0       0       0       0       0
          0     0     0         0       0       0       0       0       0       0       0       0       0

     JOBS IN = 12    JOBS OUT =  5
```

Figure 4.4. No. 8 with expected time 9 is found to be "too old" at level 3. At time = 74 No. 8 (of remaining time 6) has been [illegible] level 5 [illegible]. At time = 78, it is being served at level 5.

```
SITUATION AT T =  42

      STA 2                                                  STA 1
   JOB NO  TIME              PRIORITY 5      PRIORITY 4      PRIORITY 3      PRIORITY 2      PRIORITY 1
                             JOB NO  TIME    JOB NO  TIME    JOB NO  TIME    JOB NO  TIME    JOB NO  TIME

SERVING  5    7                0      0        0      0        0      0        0      0        0      0

QUEUED   5    4       0        0      0        0      0        8      9        0      0        2      8
         3   12       0        0      0        0      0        0      0        0      0        4      8
         7   12       0        0      0        0      0        0      0        0      0        0      0
         0    0       0        0      0        0      0        0      0        0      0        0      0
         0    0       0        0      0        0      0        0      0        0      0        0      0
         0    0       0        0      0        0      0        0      0        0      0        0      0
         0    0       0        0      0        0      0        0      0        0      0        0      0
         0    0       0        0      0        0      0        0      0        0      0        0      0
         0    0       0        0      0        0      0        0      0        0      0        0      0
         0    0       0        0      0        0      0        0      0        0      0        0      0

      JOBS IN =  8      JOBS OUT =  1

SITUATION AT T =  44

      STA 2                                                  STA 1
   JOB NO  TIME              PRIORITY 5      PRIORITY 4      PRIORITY 3      PRIORITY 2      PRIORITY 1
                             JOB NO  TIME    JOB NO  TIME    JOB NO  TIME    JOB NO  TIME    JOB NO  TIME

SERVING  6    7                0      0        0      0        8      9        0      0        0      0

QUEUED   5    4       0        0      0        2      8        0      0        0      0        4      8
         3   12       0        0      0        0      0        0      0        0      0        0      0
         7   12       0        0      0        0      0        0      0        0      0        0      0
         0    0       0        0      0        0      0        0      0        0      0        0      0
         0    0       0        0      0        0      0        0      0        0      0        0      0
         0    0       0        0      0        0      0        0      0        0      0        0      0
         0    0       0        0      0        0      0        0      0        0      0        0      0
         0    0       0        0      0        0      0        0      0        0      0        0      0
         0    0       0        0      0        0      0        0      0        0      0        0      0
         0    0       0        0      0        0      0        0      0        0      0        0      0

      JOBS IN =  8      JOBS OUT =  1

SITUATION AT T =  46

      STA 2                                                  STA 1
   JOB NO  TIME              PRIORITY 5      PRIORITY 4      PRIORITY 3      PRIORITY 2      PRIORITY 1
                             JOB NO  TIME    JOB NO  TIME    JOB NO  TIME    JOB NO  TIME    JOB NO  TIME

SERVING  0    0                0      0        2      8        8      9        0      0        0      0

QUEUED   5    4       0        0      0        0      0        0      0        0      0        4      8
         3   12       0        0      0        0      0        0      0        0      0        5      7
         7   12       0        0      0        0      0        0      0        0      0        0      0
         0    0       0        0      0        0      0        0      0        0      0        0      0
         0    0       0        0      0        0      0        0      0        0      0        0      0
         0    0       0        0      0        0      0        0      0        0      0        0      0
         0    0       0        0      0        0      0        0      0        0      0        0      0
         0    0       0        0      0        0      0        0      0        0      0        0      0
         0    0       0        0      0        0      0        0      0        0      0        0      0
         0    0       0        0      0        0      0        0      0        0      0        0      0

      JOBS IN =  8      JOBS OUT =  1
```

Figure 7.5 Job 2 is moved from the level 1 queue, where it was found to be "too old", to the level 4 queue. At time = 46, job 2 is being served and job 8 (level 3) is interrupted.

it is seen that this job has been moved to the level 4 queue. The next snap shot, at time = 46, shows job No. 2 being served a level 4. The serving of job No. 2 at level 4 interrupts the serving of job No. 8 which already occupied the level 3 server.

Manipulation of the jobs in Station 2 queue is straightforward. They are simply ordered by increasing job time. For example, at time = 44 (Figure 7.6) the queue contains jobs 5, 3, and 7 in the order of increasing job time. At time 140, however, it is seen that job No. 12 of time 11 is flagged as being too old. It now is ahead of job No. 18 of time 11 which is not yet too old.

7.6 Example Results

This example demonstrates that the system state model may conveniently be used to represent complex hierarchical, simultaneous, and asynchronous activities. In addition to the model specifications, considerable transformation logic was required. This is not surprising in view of the complexities which were represented in the queueing system. The example is analogous to many physical situations in which priority, age, and overhead of job handling are of considerable importance. The system state model construct was convenient not only for maintaining simultaneity of activity and resolving potential conflicts but also in the modeling of supersedence. An additional strength of the model is that it provides a convenient framework for coding considerable supplemental logic. Such logic enhances the comprehensiveness and flexibility of the model. For example, it would be a straightforward process to incorporate accounting logic which would determine, for each job, process time, wait time, suspended time, arrival time at each station, etc. This supplemental logic, which is

```
SITUATION AT T = 140

          STA 2.
                                                                  STA 1
       JOB NO  TIME            PRIORITY 5      PRIORITY 4      PRIORITY 3      PRIORITY 2      PRIORITY 1
                              JOB NO  TIME    JOB NO  TIME    JOB NO  TIME    JOB NO  TIME    JOB NO  TIM

SERVING 11       6               0      0       0      0       0      0       0      0       0      0

QUEUED  12      12       1       0      0      14     11       0      0      19     12       0      0
        18      11       0       0      0      15     10       0      0       0      0       0      0
         0       0       0       0      0      16      8       0      0       0      0       0      0
         0       0       0       0      0      17      6       0      0       0      0       0      0
         0       0       0       0      0       0      0       0      0       0      0       0      0
         0       0       0       0      0       0      0       0      0       0      0       0      0
         0       0       0       0      0       0      0       0      0       0      0       0      0
         0       0       0       0      0       0      0       0      0       0      0       0      0
         0       0       0       0      0       0      0       0      0       0      0       0      0
         0       0       0       0      0       0      0       0      0       0      0       0      0

       JOBS IN = 19    JOBS OUT = 11
```

```
SITUATION AT T =  44

          STA 2
                                                                  STA I
       JOB NO  TIME            PRIORITY 5      PRIORITY 4      PRIORITY 3      PRIORITY 2      PRIORITY 1
                              JOB NO  TIME    JOB NO  TIME    JOB NO  TIME    JOB NO  TIME    JOB NO  TIM

SERVING  6       7               0      0       0      0       8      9       0      0       0      0

QUEUED   5       4       0       0      0       2      8       0      0       0      0       4      3
         3      12       0       0      0       0      0       0      0       0      0       0      0
         7      12       0       0      0       0      0       0      0       0      0       0      0
         0       0       0       0      0       0      0       0      0       0      0       0      0
         0       0       0       0      0       0      0       0      0       0      0       0      0
         0       0       0       0      0       0      0       0      0       0      0       0      0
         0       0       0       0      0       0      0       0      0       0      0       0      0
         0       0       0       0      0       0      0       0      0       0      0       0      0
         0       0       0       0      0       0      0       0      0       0      0       0      0
         0       0       0       0      0       0      0       0      0       0      0       0      0

       JOBS IN =  8    JOBS OUT =  1
```

Figure 7.6 At time = 140, job 12 of time 12, has been flagged "too old" and precedes job 18 of time 11. At time = 44, no jobs a queue 2 were too old. They are arranged in the queue according to job time.

invoked by transformations, is readily added in modular increments. Modularity facilitates debugging and subsequent enlargement and refinement of the model.

7.7 General Conclusions

The system state model could be an aid in fields such as industrial engineering which emphasizes digital simulation of a wide variety of systems. The model framework would allow the engineer to specify his system in terms of steps, links, and blocks, and formulate a model representation using those very concepts, as opposed to transforming them to a limited mathematical discipline (such as queueing) embodied by a restricted set of "verbs". Constraints which frequently affect physical systems such as precedence and supersedence could readily be handled with model specifications.

8. APPENDIX A System State Model

8.1 Definition

The system state model (SSM) is firstly, a formal model for representing, in the discrete time domain, the temporal and spatial relationships among the components of the process or system being modeled. These relationships may be specified at varying and arbitrary levels of specificity. Secondarily, it may be considered also a simulation model since capability exists for supplemental representation of other aspects of component activity, in a suitable coding medium.

It is necessary to begin with a complete, inambiguous formulation of a system $\mathcal{S}$ with the following attributes:

(1) A finite, non-empty set $N = \{\eta\}$ of steps representing the component parts of each process in $\mathcal{S}$.

(2) A finite, non-empty set $P = \{\rho\}$ of equivalence classes, called blocks, induced by a partitioning of N, representing the autonomy among processes in $\mathcal{S}$.

(3) A finite, non-empty set $K = \{\kappa\}$ of links between steps representing the sequence of component parts of each process in $\mathcal{S}$.

(4) A finite, non-empty set $G = \{\gamma\}$ of function levels.

(5) A finite, non-empty set $D = \{\delta\}$ of cycle times.

(6) A finite, non-empty set $M = \{\mu\}$ of priority levels.

(7) A complete set $A = \{\alpha\}$ of Boolean primitives called input logic operators.

(8) A finite, non-empty set $B = \{\beta\}$ of transition conditions.

(9) A finite, non-empty set $T = \{\tau\}$ of transition times.

(10) A finite set $F = \{\phi\}$ of transformations.

The sets N, P and K are explicit in $\mathcal{S}$, while the remaining sets, in general, are implied.

A system state model static representation $\mathcal{M}$ of system $\mathcal{S}$ consists of the following:

(1) A finite, non-empty set L of subsystems corresponding to blocks.

(2) A finite, non-empty set W of system states corresponding to steps.

(3) A finite, non-empty set X of transitions corresponding to links.

8.1.1 System State Concept

One may imagine each step of a process within a system $\mathcal{S}$ to consist of some operation and various sequence (decision control) conditions, timing conditions, and functional transformations; while the links between steps serve solely to connect the various steps. Often, however, one may also imagine expanding a certain step into a whole sequence of steps at a more micro-level or, conversely, of consolidating several steps into a single step at a more macro-level. Hence, in general, no unique set of steps exists for quantitatively describing any given process.

In the SSM each system state may represent only the operation of one step within $\mathcal{S}$, while the transitions represent the associated sequence (decision control) conditions, timing conditions, and functional transformations. The term "system state" is used because the particular step or steps which may be active within a process at any time give important information regarding the "state" of the

process - i.e., the present inputs (sequence or decision control conditions) and something of the history of previous steps which already have been completed or, equivalently, something of the history of previous inputs. Also, the state of the process gives important information regarding the state of the system $\mathcal{S}$ to which the process belongs. In general, since there is no restriction that only one step of a particular process may be active at any time and since there certainly is no restriction that only one process within $\mathcal{S}$ may have a step active at any time, it is impossible for one system state in the SSM to represent uniquely the state of a process or the state of the system $\mathcal{S}$.

If one did desire to have exactly one system state uniquely represent the state of $\mathcal{S}$ at a given time, then each system state would no longer represent the operation of one step in a process. Instead, the step or steps which might be active within the processes of $\mathcal{S}$ at a given time would form a set of active steps, and this set of concurrent active steps would be represented by a single system state. However, it is usually very difficult to form such combinations of steps, especially when considering autonomous processes within a system $\mathcal{S}$. In the SSM a set of system states will be necessary, in general, to uniquely represent the state of the system $\mathcal{S}$ being modeled.

8.1.2 Graph Formulation

A static representation $\mathcal{M}$ of a system $\mathcal{S}$ may be formulated as a general, directed graph in which both loops and parallel arcs are permitted. Using nodes of the graph to denote system states and directed arcs to denote possible transitions between pairs of system states, the resultant graph formulation of $\mathcal{M}$ is called the system state graph. (SS-graph) Assigned to each jth node of the graph is

the ordered 3-tuple $(\eta, \mu, \alpha) = \omega$ and to each of the kth arcs emanating from the jth node the ordered 4 tuple $(\kappa, \beta, \tau, \phi) = \chi$. Assigned to each subset of nodes denoting a subsystem in $\mathcal{M}$ is the ordered 3-tuple $(\rho, \delta, \gamma) = \lambda$.

In Figure 8.1 is depicted a graph formulation in which one subsystem λ is identified and, within λ, one system state ω is identified, and associated with ω, one emanating transition χ.

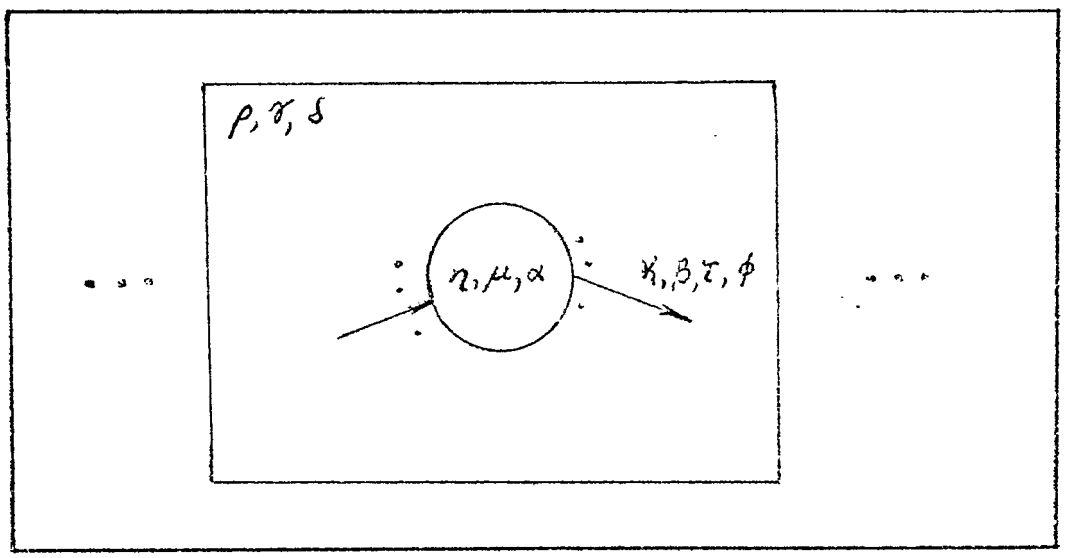

Figure 8.1 SS-graph

8.2 Static Representation

Generating a static representation $\mathcal{M}$ given a completely specified system $\mathcal{S}$ requires an understanding of the various parameters involved. The following interpretation may be given to the parameters of the λ 3-tuple (ρ, δ, γ), ω 3-tuple (η, μ, α) and χ 4-tuple $(\kappa, \beta, \tau, \phi)$.

The block parameter $\rho \in P$ is an identification parameter which denotes within $\mathcal{S}$ an autonomous subset of processes operating under a common control ("synchronizing logic" or "clock") and, except for communication with other such autonomous subsets, operating independently

and asynchronously. In $\mathcal{M}$, ρ takes a positive integer value $1 \leq \rho \leq |P|$, and is the λ-tag parameter which identifies uniquely each subsystem. The assignment of λ-tags to blocks is dependent upon the cycle time parameter $\delta \in D$. Within any block $\rho \in P$, there exists an implied or inherent synchronizing control whose function is to assist in determining a) the sequence and b) the rate of execution of the steps of the process(es) within that block. The rate or cycle time $\delta \in D$ identifies a minimum interval in which the fastest step in the block might be completed. In $\mathcal{M}$ this interval corresponds to the minimal transition time required for any system state in the subsystem to complete one of its transitions. The cycle time parameter, assigned to each block, takes a positive integer value, $1 \leq \delta \leq D$, corresponding to the actual execution rate in the block.

In $\mathcal{M}$ there is also a 0-origin discrete time domain where the represented execution of all blocks in $\mathcal{S}$ begins coincidently at represented time zero.

The assignment of λ-tags to blocks may be completed by arranging the cycle time assignments in natural order, with equal cycle times ordered arbitrarily. The resultant ordering reflects also an ordering of the blocks to which the individual cycle times are assigned. That block with the smallest cycle time has $\rho = 1$ assigned to it, subsequent blocks in the order are ssigned successively higher ρ-values, and the block with the largest cycle time has $\rho = |P|$ assigned to it.

The possible existence of fundamentally different types of processes in $\mathcal{S}$ must be distinguished in $\mathcal{M}$. Specifically, two classes of block processes, called hardware and software, may exist in $\mathcal{S}$ and these may be distinguished by the function level parameter

$\gamma \in G$. In $\mathcal{M}$ the parameter takes a positive integer value, $1 \leq \gamma \leq 2$, denoting either hardware, $\gamma = 1$, or software, $\gamma = 2$, class processes. Different blocks may have different cycle times yet be of the same function level.

Together, the three parameters λ-tags, cycle time and function level form the ordered 3-tuple (ρ, δ, γ) and define a subsystem $\lambda_\rho \in L$, $1 \leq \rho \leq |P|$, in $\mathcal{M}$.

The step parameter $\eta \in N$ identifies one step within a process of $\mathcal{S}$; η also serves to identify a system state in $\mathcal{M}$. In $\mathcal{M}$, η takes a positive integer value $1 \leq \eta \leq |N|$, and is the ω-tag parameter which identifies uniquely each system state. The assignment of ω-tags to steps may be dependent upon the inherent precedence among the steps.

Within each block in $\mathcal{S}$, one or more steps of one or more processes may tend naturally to execute simultaneously but are prevented from doing so by the existence of some kind of relative precedence between steps or groups of steps. This relative precedence avoids potential conflicts and helps maintain synchronous hierarchical operation within the block. If the steps are arranged in groups according to relative, exclusive precedence the resulting order is called their priority and those with relatively higher priority take exclusive precedence over those of lower priority. The parameter priority level $\mu \in M$ denotes the priority among groups of steps in a block of $\mathcal{S}$. In $\mathcal{M}$, precedence among system states is achieved, in part, by ordering groups of system states as the represented groups of steps are ordered. The priority of each group is denoted by μ which takes a non-negative integer value. For the block $\rho \in P$ with the greatest number of distinct exclusive priority levels $|M|$, that group

of steps with the lowest priority has $\mu = 1$ assigned to it, subsequent higher priority groups are assigned successively higher values, and the group with the highest priority has $\rho = |M|$ assigned to it. Every step is assumed to have a priority equal to the priority of the group in which it resides.

Further distinctions of local precedence or priority among individual steps in a group may be possible, but these are dependent upon the type of block to which the steps belong. In some cases several steps within a priority group may be able to execute simultaneously while in other cases only one step within the group may execute at a time. In $\mathcal{M}$ these distinctions are dependent upon the function level of the subsystem to which the priority levels belong. In a function level one subsystem, there exists no local precedence or priority among system states of a given priority level and one or more system states may be in some stage of transition simultaneously. In a function level two subsystem, $\gamma = 2$, there does exist an inherent local, exclusive precedence, called rank among system states of a given priority level. Rank may be implicit in $\mathcal{S}$ but in $\mathcal{M}$ it must be denoted explicitly. In $\mathcal{M}$ rank is denoted by proper assignment of η -values to steps. Steps are arranged in ascending order of rank within each priority level, priority levels are arranged in order of priority (ascending μ -values), and blocks are arranged in order of cycle time (ascending δ -values). The assignment of ω -tags and rank to steps may be completed by assigning $\eta = 1$ to the first step in the above step ordering, and assigning successive η -values in natural order to subsequent steps, and assigning $\eta = \Pi$, to the last step in the step ordering. Steps within function level one blocks, and steps within

rank within priority levels of function level two blocks may be ordered arbitrarily.

There also may exist in $\mathcal{S}$, effectively, an inclusive priority level for any block wherein steps may be executed without prempting or being prempted by other steps within the level or any exclusive priority level. In $\mathcal{M}$ this inclusive priority level is denoted by $\mu = 0$ wherein no rank exists irrespective of the function level of the parent subsystem. Consequently, each system state in this priority level may be in active transition without regard to other system state activity elsewhere in exclusive priority levels. A priority level with $\mu = 0$ may be considered having the highest inclusive precedence of any level in a subsystem in $\mathcal{M}$.

For each step in $\mathcal{S}$ there exists, effectively, some type of input logic for the links which terminate at this step from previous steps. Only when this so-called input logic is satisfied will the step actually be executed. In $\mathcal{S}$ this input logic may be only implied but in $\mathcal{M}$ it is stated explicitly. The set A of input logic operators contains one of several complete sets of Boolean primitives. The chosen set contains two operators called EXCLUSIVE OR ($\oplus$) and logical AND ($\cdot$) $A = \{\oplus, \cdot\}$. In $\mathcal{M}$ each system state has one and only one input logic operator associated with it ($\alpha = \oplus$ or $\alpha = \cdot$), and a system state may be entered only after its input logic is satisfied. Each system state has one or more associated transitions which terminate to it from other system states and a necessary condition for entering the system state is that a certain logical combination of these transitions has been completed. The input logic operator $\alpha \in A$ specifies the type of input logic which exists for the system state

and determines what type of logical combination of terminating transitions has been completed. If $\alpha = \oplus$, then a mutually-exclusive input situation exists wherein one and only one of all terminating transitions may be completed if the input condition is to be satisfied. If $\alpha = .$, then a conjunctive input situation exists wherein all terminating transitions must be completed if the input condition is to be satisfied.

Together, the three parameters ω -tag, priority level and input logic operator form the ordered 3-tuple (η, μ, α) and define a system state $\omega_\eta \in W$, $1 \leq \eta \leq |N|$, in $\mathcal{M}$. If two system states, ω_i and ω_j are in the same priority level of the same subsystem and rank exists, ω_i is of greater rank than ω_j if $i > j$.

After a step in $\mathcal{S}$ is begun execution, a certain time will elapse before the execution will be completed. When the execution is completed some link(s) will point to the next step(s) to be executed. The length of time needed to complete execution of the step, and the particular next step(s) which is (are) linked for execution both depend on the conditions which prevail within at the time. In $\mathcal{M}$ a system state is entered and begins execution involving transition(s) to one or more system states. The link parameter, $\kappa \in K$, which denotes a specific link between a pair of steps in $\mathcal{S}$, also serves to identify in $\mathcal{M}$ a particular transition between a pair of system states. In $\mathcal{M}$ it takes an integer value $1 \leq \kappa \leq |K|$, and is the χ -tag parameter which labels uniquely each transition. The assignment of κ -values to links may be arbitrary. Hence some first link has $\kappa = 1$ assigned

to it, other links have successive values of κ assigned and some last link has $\kappa = |K|$ assigned to it.

The implied output logic of each step in $\mathcal{S}$ determines which link(s) is (are) taken to subsequent step(s). In $\mathcal{M}$ this implied output logic is specified by associating a condition or combination of conditions with each link. The parameter transition condition $\beta \in B$ is used which, in general, may be a Boolean function in n variables. If the transition condition is satisfied, β is logically true and the corresponding link will be taken. Transition conditions are formulated for each link so as to reflect the conditions under which that link would be taken during execution of $\mathcal{M}$.

The time consumed during execution of a step in $\mathcal{S}$ may depend upon the subsequent link to be taken. In $\mathcal{M}$ this time is specified by the transition time $\tau \in T$ parameter which takes an integer value $1 \leq \tau \leq |T|$ and, in general, may be an algebraic Function in n variables. Transition times are assigned to each link to reflect the execution time of the step from which the link emanates, given that the link is to be taken when execution of the step is complete. The value of τ assigned to any link denotes the time needed to execute the associated step, given that the execution occurs independently of all other steps in $\mathcal{S}$, and is expressed in units of the cycle time assigned to the parent block.

In $\mathcal{M}$, each link may also have one or more implied operations associated with it that provide supplemental specification of activity in $\mathcal{S}$. The transformation parameter ϕ denotes the additional specifications to be assigned to each link. Typical specifications include statistical computation, symbol input/output and data transfer.

Together the four parameters of κ-tag, transition conditi..,

transition time and transformation form the ordered 4-tuple $(\kappa, \beta, \tau, \phi)$ and define a transition $\chi_\kappa \in X$, $1 \leq \kappa \leq |K|$, in $\mathcal{M}$. A transition which emanates from some ω_j residing in subsystem λ_ℓ is taken and becomes active if ω_j is entered and β_κ is TRUE. The minimum time required before the transition can be completed is expressed in terms of cycle time (δ_ℓ) of λ_ℓ. Existence of a transformation is recognized when the transition is completed; all transformations consume zero time throughout $\mathcal{M}$.

8.2.1 Dubbed System States

Additional special-purpose system states may be defined which are restricted forms of the normal system state considered thus far. Two such forms are initial and terminal system states. The need for their existence in $\mathcal{M}$, in general, is only implied by the specification $\mathcal{S}$. An initial system state ω^i is a system state with priority level = 0, either input logic operator; no terminating transitions; and one or more emanating transitions, each with $\beta = 1$ (TRUE), $\tau = 0$ and an optional ϕ. A terminal system state ω^t is a system state with EXCLUSIVE OR input logic, one or more terminating transitions and no emanating transitions.

Initial system states function as source nodes in the SSM to initiate modeling activity. They are enterable only at model time zero since they have no terminating transitions. Terminal system states function as sink nodes in the SSM to terminate existing modeling activity in a particular subsystem at a specific priority level.

8.3 Transforming $\mathcal{S}$ to $\mathcal{M}$

To transform system $\mathcal{S}$ to static representation $\mathcal{M}$, do the following:

(A) Identify blocks

(B) For each block -

(1) identify cycle time

(2) identify function level

(3) create subsystem by assigning appropriate δ -value and γ -value to block and then assigning ρ -value in increasing order of δ -value.

(4) identify steps

(5) for each step -

(a) identify input logic

(b) identify priority level

(c) identify rank, if existent

(d) create system state by assigning appropriate α and μ-value to step and then assigning η -value, in order of rank if relevant.

(6) identify links

(7) for each link -

(a) identify necessary conditions

(b) identify time to complete operation in step, conditional on this link being taken to next step.

(c) identify any functional (supplementary) operations.

(d) create transition by appropriate β -value or expression, τ -value or expression and ϕ to link and then assigning κ -value.

(C) For each system state -

(1) identify parent subsystem corresponding to parent block of represented step

(2) assign system state to parent subsystem

(D) For each transition -

(1) identify the emanating/terminating step pair of the corresponding link

(2) assign to the transition the corresponding emanating/terminating system state pair.

8.4 Modeler's Guide for Version 4.1

A sequential list of specifications for a complete static representation $\mathcal{M}$ is organized as shown in Figure 8.2. The individual types of specification are called orders. These orders are listed and explained in the following paragraphs.

8.4.1 Subsystem, System State and Transition Orders

Each subsystem (λ), system state (ω) and transition (χ) is defined by a separate order. Subsystems are defined by L-orders, system states by W-orders, and transitions by X-orders. Symbolic identifiers are assigned to all such orders, and each identifier must be unique with respect to all other identifiers. An identifier for subsystem and system states consists of one to four characters with leading or trailing blanks being ignored. An identifier for transitions must be of the form Lnnn, where nnn is an integer from 1 to 999. The first character must be nonnumeric and blanks should not be embedded within the identifier. At least one subsystem (L-order), one system state (W-order), and one transition (X-order) must be specified.

8.4.2 Control Orders

Control orders are identified by the characters "./" appearing in the first two character positions of the order.

8.4.3 Initial Condition Orders

These orders may be used to identify initial system states and to

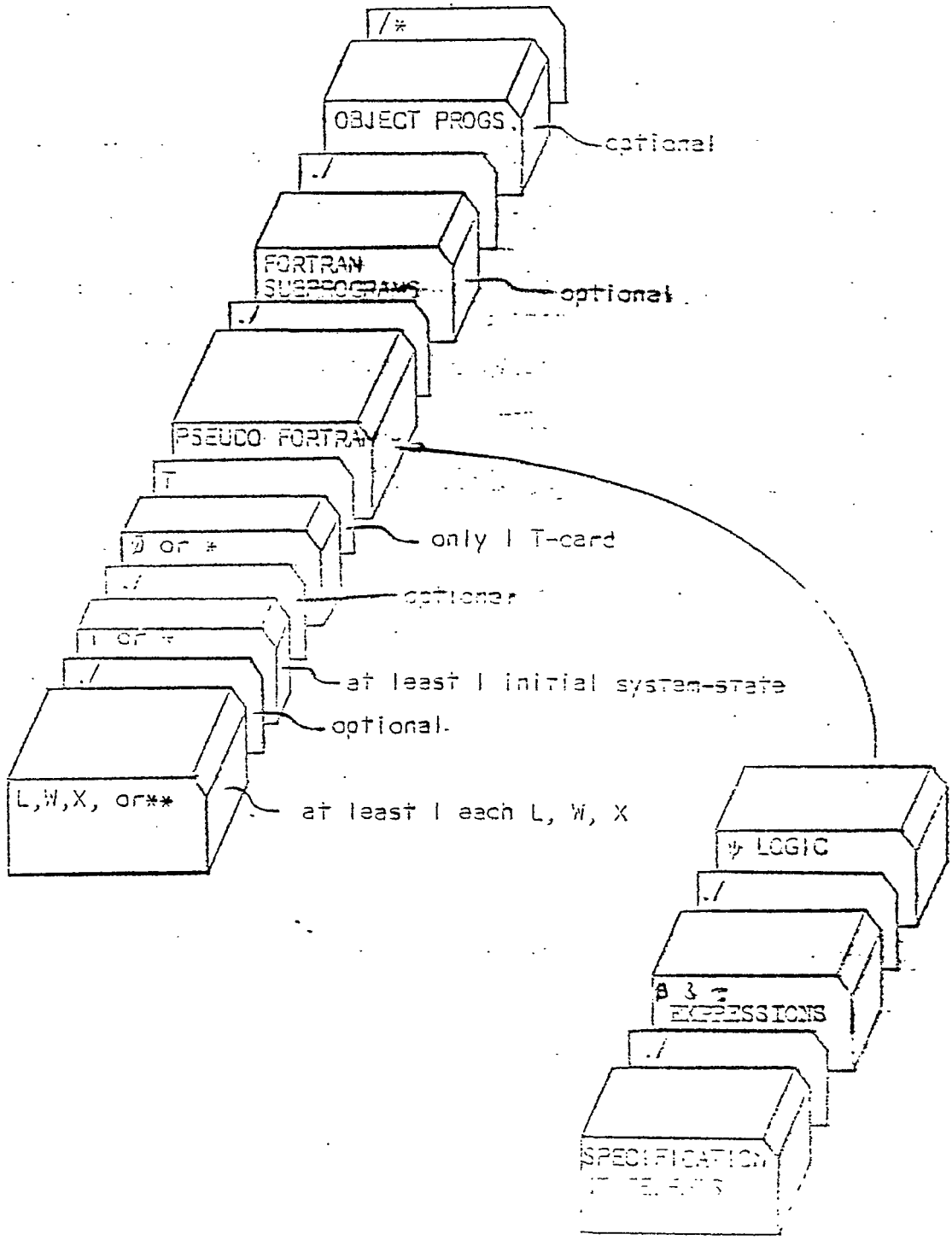
/*
OBJECT PROGS.
optional
./
FORTRAN
SUBPROGRAMS
optional
./
PSEUDO FORTRAN
T
only 1 T-card
optional
./
at least 1 initial system-state
optional
L,W,X, or**
at least 1 each L, W, X
LOGIC
./
EXPRESSIONS
./
SPECIFICATION

specify specific transition latches to be set, indicating the transition has "completed". In each I-order one initial system state may be specified in the name field using the appropriate identifier. The I-order may also be used to set transition latches for terminating transitions of a system state. This is accomplished by specifying the system state identifier in the name field and, in subsequent fields, identifiers of any terminating transitions for which the transition latch(s) should be set.

8.4.4 Control and Monitor Option Orders

One monitor option may be requested by name in an O-order. Further O-orders may be required to provide all necessary parameters for the monitor option. These orders must appear immediately before the T-order. Various control options may be requested by O-orders also. These requests may appear at any time before the T-order. Further information may be found in section 8.6 Options.

8.4.5 Model Termination Order

The number of modeling cycles to be executed must be specified in a T-order. Receipt of the T-order also signals the end of static specifications of the model representation.

8.4.6 Expressions for Transition Conditions and Transition Times

The T-order is followed by the β and τ expressions. These are written in a pseudo Fortran source code. The pseudo Fortran begins with any Fortran specification statements followed by a control (./) order.

8.4.6.1 β Expression (Transition Condition)

Each β may be a primitive (independent logical variable) or an

expression (Boolean function of n logical variables). In the β-field of the X-order, a primitive β is denoted by "0" if its value is FALSE or by "1" if its value is TRUE. An expression β is denoted by "-1". The expression itself is defined in a FORTRAN like manner as follows:

Col. 1-6	Col. 7-66
BLnnn	Boolean expression, function reference, or combination of these two

where Lnnn is the transition identifier appearing in the appropriate X-order. A primitive β may be referenced as B(L(nnn)). That is, the primitive β is referenced by the variable B with subscript L with subscript nnn where Lnnn is the transition identifier.

Example:		
	BL80	B(L(79))
	BL812	.NOT.B(L(002))
	BL1	FUNC(X).OR.B(L(002))

In this example, B(L(79)), B(L(002)) denote primitive β for transitions L79 and L002 respectively, while BL80, BL812, and BL1 denote expression β for transition L80, L812, L1 respectively. FUNC(X) represents a FORTRAN function.

8.4.6.2 τ Expression (Transition Time)

Each τ may be a primitive (independent variable) or an expression (function of variables). In the τ field of the X-order, a primitive τ is denoted by a positive integer less than 16,384 and equal to the transition time. An expression τ is denoted by "-i" and is defined in a FORTRAN like manner as follows:

Col. 1-6	Col. 7-66
TLnnn	Constant, variable, arithmetic statement, or function reference

where Lnnn is the transition identifier appearing in the appropriate X-order. A primitive τ may be referenced as T(L(nnn)), that is, the

same as a primitive β but using the variable T. The value $\tau = 0$ has a special meaning and applies to transitions emanating from initial system states.

8.4.7 Statements for Transformations

An existing transformation (ϕ) is denoted by "-1" in the ϕ-field of the appropriate X-order. Each such ϕ consists of one or more FORTRAN statements, the first of which must have as a statement label the χ (transition identifiers) of the associated transition. This label will be non-numeric. If additional statement labels are needed, they must be numbers in the range 60001-99998, and they must be unique from all other additional statement numbers used in all other transformations. If it is necessary, when executing the statements of a ϕ, to branch to the first FORTRAN statement, then a dummy first statement must be added since it is impossible to reference a statement using a non-numeric label.

```
Example:  TX1  COUNT   COUNT + 1
                         .
                         .
                         .
                       GO TO TX1
```

TX1 is an illegal statement reference; consequently, a dummy first statement must created

```
TX1  CONTINUE
6001 COUNT   COUNT + 1
       .
       .
       .
     GO TO 6001
```

In creating each ϕ from the Fortran statements, the SOF implementation automatically generates a terminal statement of the form "GO TO 99999" as the last statement for each existing ϕ. If the user wishes to use

a ϕ that includes multiple exits, then the referenced statement number for each exit must be 99999. The ϕ's may appear in any order, but considerable computer initialization time may be saved if they are in the same sequence as the χs (X-orders) to which they belong.

8.4.8 Notes

(1) The β , τ and ϕ specifications are used to generate a Fortran subroutine named "BTP".

(2) Control orders in β , τ and ϕ specifications must appear even though orders do not occur between them.

(3) Values for η and κ are assigned in the sequence in which the input orders occur.

(4) During execution of a model representation, expression βs and τs associated with emanating transitions of a given system state are evaluated in the sequence those transitions appeared in the input of the static specifications.

(5) Ordering is by transitions within system states, system states by rank within priority levels, and priority levels within subsystems.

(6) Rank is determined by ascending η values.

(7) All transition latches not specifically set are reset at initialization.

(8) Do not override the SSM generated

IMPLICIT LOGICAL * 1(B), INTEGER * 2(T)

for the β and τ expressions and ϕ statements.

(9) If subprograms are needed for support of the β and τ expressions and ϕ statements, these may be written in Fortran and input in the sequence shown in Figure 8.2. All

Fortran library routines are available.

(10) If subprograms have been written previously, or otherwise supplied, and are in object form, these may be inserted as shown in Figure 8.2.

8.5 Order Formats

(1) L-order (subsystem)

Col. 1 : "L"

Col. 7-10 : ρ (subsystem identifier), 1-4 characters, leading alphabetic character, unique with respect to all other ρ, η, and K identifiers.

Col. 25-32 : δ (cycle time), positive integer $\leq$ 32766.

Col. 33-40 : γ (function level), "1" or "2" denoting function level one or two, respectively.

(2) W-order (system state)

Col. 1 : "W"

Col. 7-10 : η (system state identifier), 1-4 characters, leading alphabetic character, unique with respect to all other ρ, η, and K identifiers.

Col. 13-16 : ρ (identifier of subsystem to which the system state belongs). If preceding L-order defined the subsystem to which this system state belongs, then this field may be left blank.

Col. 25-32 : μ (priority level), non-negative integer $\leq$ 32766.

Col. 33-40 : α (input logic operator), "." or "+" denoting logical-and or exclusive-or operator, respectively.

(3) X-order (transition)

Col. 1 : "X"

Col. 7-10 : K (transition identifier), 1-4 characters leading alphabetic character, unique with respect to all other ρ, η, and K identifiers.

Col. 13-16 : η_i (identifier of system state from which the transition emanates).

Col. 19-22 : η_j (identifier of system state to which the transition terminates.)

Col. 25-32 : β (transition condition), "0" or "1" if a primitive, "-1" if an expression.

Col. 33-40 : τ (transition time), a positive integer 16383 if a primitive, "-1" if an expression, "0" if emanating from a combinational system state.

Col. 41-48 : ϕ (transformation), blank or "0" denotes no transformation, "-1" if a transformation exists.

(4) I-order (initial system state)

Col. 1 : "I"

Col. 7-10 : η (system state identifier).

Col. 13-16 : κ (transition identifier) or blank.

Col. 19-22 : κ or blank.

Col. 25-28 : κ or blank.

Col. 33-36 : κ or blank.

Col. 41-44 : κ or blank.

(5) T-order (termination)

Col. 1 : "T"

Col. 7-14 : number of modeling cycles to be executed before termination, positive integer $2^{32} - 1$.

(6) O-order (option)

Col. 1 : "O"

Col. 2-5 : code name of control option or application algorithm option.

Col. 7-80 : (see particular option).

(7) ./-order (control)

Col. 1-2 : "./"

Col. 3-72 : blank.

8.6 Options

By using an O-order the modeler may request certain control and monitor options. Listed below are the options available.

8.6.1 Control options

(1) PRNT - Print the list of input specifications. This order may appear anywhere in the input list and causes the remainder of the input to be listed.

Card format:

Col. 1 : "O"

Col. 2-5 : "PRNT"

(2) MDRP - Print the static model representation.

Col. 1 : "O"

Col. 2-5 : "MDRP"

(3) SYML - Print the table of symbols. When this request is made, a table containing all user identifier symbols will be printed following the static model representation if it is requested.

Card format:

Col. 1 : "O"

Col. 2-5 : "SYML"

8.6.2 Monitor options

(1) MNTR - Monitor the activity of the named subsystem or system state. The data from this monitoring is transferred to secondary storage for later use.

Card format:

Col. 1 : "O"

Col. 2-5 : "MNTR"

Col. 7-10 : ω-identifier or ρ-identifier.

Col. 13-16 : μ (priority level).

Possible specification combinations:

			disposition
1.	X		individual ω is monitored.
2.		X	all ω in ρ are monitored.
3.	X	X	all ω with μ in ρ are monitored.

(2) SACT - Print a status activity dump. Data from the MNTR option is printed beginning at the initial model time specified and ending at the terminal model time specified. Data printed is controlled by the parameters of the MNTR option card.

Card format:

Col. 1 : "O"

Col. 2-5 : "SACT"

Col. 7-14 : initial model time to begin monitoring, or 0.

Col. 19-26 : terminal model time to end monitoring, or 0.

9. APPENDIX B Random Variable Generator Program

The subroutine RANDU is from the IBM Scientific Subroutine Package. The subroutine ATIME is based on material presented by Dr. C. E. Donaghey, University of Houston, in a graduate Industrial Engineering course, spring semester, 1971.

```
FORTRAN IV G LEVEL  20                    RANDU              DATE = 72163          22/08/39
0001                SUBROUTINE RANDU(IX,IY,YFL)
          C         IX REPRESENTS THE SEED. THIS VALUE SHOULD BE INITIALIZED
          C         IN THE CALLING PROGRAM
0002                IY=IX * 65539
0003                IF(IY)5,6,6
0004              5 IY=IY + 2147483647 + 1
0005              6 YFL=IY
0006                YFL=YFL* 0.4656613E-9
0007                RETURN
0008                END

FORTRAN IV G LEVEL  20                    ATIME              DATE = 72163          22/03/38
0001                SUBROUTINE ATIME(P1,P2,P3,K,VAL,NSEED)
0002                IF(K.EQ.11)GO TO 111
          C         K=11 NORMAL DISTRIBUTION
          C              P1= MU(MEAN)
          C              P2= SIGMA(DEVIATION)
          C              P3= 0
0003                IF(K.EQ.15)GO TO 115
          C         K=15 EXPONENTIAL DISTRIBUTION, FALLING TO THE RIGHT
          C              P1= MEAN
          C              P2= MIN
          C              P3= 0
0004                IF(K.EQ.16)GO TO 115
          C         K=16 EXPONENTIAL DISTRIBUTION, RISING TO THE RIGHT
          C              P1= MEAN
          C              P2= MAX
          C              P3= 0
0005                IF(K.EQ.21)GO TO 121
          C         K=21 BINOMIAL DISTRIBUTION, USE FOR SMALL VALUES OF N
          C              P1= N
          C              P2= PROBABILITY
          C              P3= 0
0006                IF(K.EQ.22)GO TO 122
          C         K=22 BINOMIAL DISTRIBUTION, USE FOR LARGE VALUES OF N
          C              P1= N
          C              P2= PROBABILITY
          C              P3= 0
0007                IF(K.EQ.20)GO TO 120
          C         K=20 UNIFORM DISTRIBUTION
          C              P1= MIN
          C              P2= MAX
          C              P3= 0
0008                IF((K.GE.31).AND.(K.LE.40))GO TO 130
          C         K=31-40 ERLANG SKEWED TO RIGHT
          C              P1= MEAN
          C              P2= MIN
          C              P3= MAX
          C              SUBTRACT 30 FROM K TO FIND SHAPE PARAMETER
0009                IF((K.GE.41).AND.(K.LE.50))GO TO 140
          C         K=41-50 ERLANG SKEWED TO LEFT
          C              P1= MEAN
          C              P2= MIN
          C              P3= MAX
          C              SUBTRACT 40 FROM K TO FIND SHAPE PARAMETER
0010                RETURN
0011            111 SUM=0.
0012                DO 1111 I=1,12
0013                CALL RANDU(NSEED,IY,YFL)
0014                NSEED=IY
```

```
      SUM=SUM+ YFL
 1111 CONTINUE
      VAL=(SUM-6.)*P2 +P1
      RETURN
  115 CALL RANDU(NSEED,IY,YFL)
      NSEED=IY
      VAL= -(P1-P2)*   ALOG(YFL)
      VAL=VAL+P2
      RETURN
  116 CALL RANDU(NSEED,IY,YFL)
      NSEED=IY
      VAL=-(P2-P1)*   ALOG(YFL)
      VAL= P2-VAL
      IF(VAL.LT.0.)GO TO 116
      RETURN
  121 N=P1
      KVAL=0
      DO 1121 I=1,N
      CALL RANDU(NSEED,IY,YFL)
      NSEED=IY
      U=YFL
      IF(U.LE.P2)KVAL=KVAL+1
 1121 CONTINUE
      VAL=KVAL
      RETURN
  120 CALL RANDU(NSEED,IY,YFL)
      NSEED=IY
      R=YFL
      VAL=R*(P2-P1) + P1
      RETURN
  122 N=P1
      R=(1.-P2)**N
      CALL RANDU(NSEED,IY,YFL)
      NSEED=IY
      U=YFL
      IF(U.LE.R)GO TO 1122
      SUM=R
      DO 1222 L=1,N
      I=L-1
      R=((N-I)/(I+1))*(P2/(1.-P2))*R
      SUM=SUM+R
      IF(U.LE.SUM)GO TO 1322
 1222 CONTINUE
      VAL=N
      RETURN
 1122 VAL=0.
      RETURN
 1322 VAL=L
      RETURN
  130 JK=K-30
 1131 PROD=1.
      DO 1130 I=1,JK
      CALL RANDU(NSEED,IY,YFL)
      NSEED=IY
      PROD=PROD* YFL
 1130 CONTINUE
      VAL= ( -(P1-P2)*ALOG(PROD))/JK +P2
      IF(P3.EQ.0.)RETURN
      IF(VAL.LE.P3)RETURN
      GO TO 1131
  140 JK=K-40
 1141 PROD=1.
      DO 1140 I=1,JK
      CALL RANDU(NSEED,IY,YFL)
      NSEED=IY
      PROD=PROD* YFL
 1140 CONTINUE
      VAL= P3 +((P3-P1)*ALOG(PROD))/JK
      IF(VAL.GE.P2)RETURN
      GO TO 1141
      END
```

10. APPENDIX C Turing Machine Program

```
*****************************************************************************
                          MODEL REPRESENTATION INPUT
*****************************************************************************
L     MACH                1       2
W     I01   MACH          1       +
W     I02   MACH          0       +
W     S01   MACH          1       +
W     S02   MACH          1       +
W     S03   MACH          1       +
W     S04   MACH          1       +
W     S05   MACH          1       +
W     S06   MACH          1       +
W     T01   MACH          1       +
W     T02   MACH          1       +
W     T03   MACH          1       +
X     L01   S01   S01     -1      1       -1
X     L02   S01   S02     -1      1       -1
X     L03   S02   S02     -1      1       -1
X     L04   S02   T01     -1      1       -1
X     L05   S02   S03     -1      1       -1
X     L06   S02   S04     -1      1       -1
X     L07   S04   S04     -1      1       -1
X     L08   S04   S06     -1      1       -1
X     L09   S04   S05     -1      1       -1
X     L10   S05   S05     -1      1       -1
X     L11   S05   S02     -1      1       -1
X     L12   S06   S06     -1      1       -1
X     L13   S06   S01     -1      1       -1
X     L14   S03   S03     -1      1       -1
X     L15   S03   S05     -1      1       -1
X     L16   S03   S06     -1      1       -1
X     L17   I01   S01     1       1       -1
X     L18   S02   T02     -1      1       -1
X     L19   S06   T03     -1      1       -1
X     L20   I02   I01     1       0
-/
I     I02
-/
OMDRP
OSYML
OSACT
OMNTR MACH
T     500
```

RHO	L-NAME	RHO	L-NAME	RHO	L-NAME	RHO	L-NAME
1	MACH						

ETA	W-NAME	ETA	W-NAME	ETA	W-NAME	ETA	W-NAME
1	I01	4	S02	7	S05	10	T02
2	I02	5	S03	8	S06	11	T03
3	S01	6	S04	9	T01		

KAPPA	X-NAME	KAPPA	X-NAME	KAPPA	X-NAME	KAPPA	X-NAME
1	L01	6	L06	11	L11	16	L16
2	L02	7	L07	12	L12	17	L17
3	L03	8	L08	13	L13	18	L18
4	L04	9	L09	14	L14	19	L19
5	L05	10	L10	15	L15	20	L20

INITIAL MODEL REPRESENTATION (PAGE 1)

	SUBSYSTEMS				SYSTEM-STATES					TRANSITIONS						
LINE	USER SYMBOL	RHO	DELTA	GAMMA	USER SYMBOL	ETA	MU	ALPHA	STATUS	USER SYMBOL	KAPPA	ETA(J): ETA	LINE	BETA	TAU	PHI
1	MACH	1	1	2												
2					I02	2	0	+	IW							
3										L20	20	1	31	1	0	0
4					T03	11	1	+	X							
5					T02	10	1	+	X							
6					T01	9	1	+	X							
7					S06	8	1	+	IW							
8										L12	12	8	7	-1	1	-1
9										L13	13	3	28	-1	1	-1
10										L19	19	11	4	-1	1	-1
11					S05	7	1	+	IW							
12										L10	10	7	11	-1	1	-1
13										L11	11	4	22	-1	1	-1
14					S04	6	1	+	IW							
15										L07	7	6	14	-1	1	-1
16										L08	8	8	7	-1	1	-1
17										L09	9	7	11	-1	1	-1
18					S03	5	1	+	IW							
19										L14	14	5	18	-1	1	-1
20										L15	15	7	11	-1	1	-1
21										L16	16	8	7	-1	1	-1
22					S02	4	1	+	IW							
23										L03	3	4	22	-1	1	-1
24										L04	4	9	6	-1	1	-1
25										L05	5	5	18	-1	1	-1
26										L06	6	6	14	-1	1	-1
27										L18	18	10	5	-1	1	-1
28					S01	3	1	+	IW							
29										L01	1	3	28	-1	1	-1
30										L02	2	4	22	-1	1	-1
31					I01	1	1	+	IW							
32										L17	17	3	23	1	1	-1

```
0001          SUBROUTINE BTP(BBBBB,TTTTT,YYYYY,*)
0002          IMPLICIT INTEGER*2(T),LOGICAL*1(B)
0003          COMMON/BLK1/ ITAPE,I,NPTR,
             1  SW1,SW2,SW3,SW4,SW5,SW6,SW7,SW8,SW9,SW10,SW11,SW12,SW13,SW14,
             1  SW15,SW16,SW17,SW18,SW19
0004          LOGICAL*1
             1  SW1,SW2,SW3,SW4,SW5,SW6,SW7,SW8,SW9,SW10,SW11,SW12,SW13,SW14,
             1  SW15,SW16,SW17,SW18,SW19
0005          DIMENSION ITAPE(100)
0006          INTEGER*2 XXXXX,YYYYY,ZZZZZ,L
0007          COMMON/CH11/B(3000),T(1000),L(1000)
0008          ZZZZZ=YYYYY+180
0009          ZZZZZ=ZZZZZ-180
0010          GO TO (
             1        2001,2002,2003,2004,2005,2006,2007,2009,2009,2010
             1       ,2011,2012,2013,2014,2015,2016,2018,2019,   1,   2
             1       ,  3,   4,   5,   6,   7,   8,   9,  10,  11,  12
             1       ,  13,  14,  15,  16,  17,  18,  19,  19,  19,  19
             1                                                        ),ZZZZZ
0011          RETURN 1
        C BL01
0012     2001 BBBBB= SW1
0013          GO TO 99999
        C BL02
0014     2002 BBBBB= SW2
0015          GO TO 99999
        C BL03
0016     2003 BBBBB= SW3
0017          GO TO 99999
        C BL04
0018     2004 BBBBB= SW4
0019          GO TO 99999
        C BL05
0020     2005 BBBBB= SW5
0021          GO TO 99999
        C BL06
0022     2006 BBBBB= SW6
0023          GO TO 99999
        C BL07
0024     2007 BBBBB= SW7
0025          GO TO 99999
        C BL08
0026     2008 BBBBB= SW8
0027          GO TO 99999
        C BL09
0028     2009 BBBBB= SW9
0029          GO TO 99999
        C BL10
0030     2010 BBBBB= SW10
0031          GO TO 99999
        C BL11
0032     2011 BBBBB= SW11
0033          GO TO 99999
        C BL12
0034     2012 BBBBB= SW12
0035          GO TO 99999
        C BL13
0036     2013 BBBBB= SW13
0037          GO TO 99999
        C BL14
0038     2014 BBBBB= SW14
0039          GO TO 99999
        C BL15
0040     2015 BBBBB= SW15
0041          GO TO 99999
        C BL16
0042     2016 BBBBB= SW16
0043          GO TO 99999
```

```
C BL18
 2018 88888= SW18
      GO TO 99999
C BL19
 2019 88888= SW19
      GO TO 99999
C L17
   17 CONTINUE
      WRITE(NPTR,7005)
 7005 FORMAT('1','INITIAL TAPE CONDITION')
      CALL SHOW
      WRITE(NPTR,7006)
 7006 FORMAT('1')
 6002 I=I-1
      CALL SHOW
      WRITE(NPTR,7004)I
 7004 FORMAT(' ','I=',I4)
      IF(ITAPE(I).EQ.3)GO TO 6001
      SW2  =.FALSE.
      SW1  =.TRUE.
      IF(ITAPE(I).EQ.0)ITAPE(I)=2
      IF(ITAPE(I).EQ.1)ITAPE(I)=4
      CALL SHOW
      GO TO 99999
 6001 SW2  =.TRUE.
      SW1  =.FALSE.
      GO TO 99999
C L01
    1 CONTINUE
      GO TO 6002
 8001 CONTINUE
      GO TO 99999
C L02
    2 CONTINUE
 6003 I=I+1
      CALL SHOW
      WRITE(NPTR,7004)I
      IF(ITAPE(I).EQ.9)GO TO 6003
      IF((ITAPE(I).EQ.0).OR.(ITAPE(I).EQ.1))GO TO 6004
      IF(ITAPE(I).EQ.3)GO TO 6005
      IF(ITAPE(I).EQ.2)GO TO 6006
      IF(ITAPE(I).EQ.4)GO TO 6007
      GO TO 99999
 6003 SW4  =.TRUE.
      SW3  =.FALSE.
      SW18  =.FALSE.
      SW5  =.FALSE.
      SW6  =.FALSE.
      GO TO 99999
 6004 SW3  =.TRUE.
      SW18  =.FALSE.
      SW5  =.FALSE.
      SW4  =.FALSE.
      SW6  =.FALSE.
      GO TO 99999
 6005 SW18  =.TRUE.
      SW3  =.FALSE.
      SW5  =.FALSE.
      SW4  =.FALSE.
      SW6  =.FALSE.
      GO TO 99999
 6006 ITAPE(I)=0
      CALL SHOW
      SW5  =.TRUE.
      SW6  =.FALSE.
      SW18  =.FALSE.
      SW3  =.FALSE.
      SW4  =.FALSE.
      GO TO 99999
 6007 ITAPE(I)=1
      CALL SHOW
      SW6=.TRUE.
      SW5  =.FALSE.
      SW18  =.FALSE.
      SW3  =.FALSE.
      SW4  =.FALSE.
```

```
0115              GO TO 99999
            C L03
0116            3 CONTINUE
0117              GO TO 6008
0118         6002 CONTINUE
0119              GO TO 99999
            C L04
0120            4 CONTINUE
0121              WRITE(NPTR,7001)
0122         7001 FORMAT('1','ENDING TAPE CONDITION')
0123              CALL SHOW
0124              GO TO 99995
            C L18
0125           18 CONTINUE
0126              WRITE(NPTR,7002)
0127         7002 FORMAT(' ','ERROR CONDITION TERMINATION L18')
0128              CALL SHOW
0129              GO TO 99999
            C L05
0130            5 CONTINUE
0131         6009 I=I+1
0132              CALL SHOW
0133              WRITE(NPTR,7004)I
0134              IF((ITAPE(I).EQ.2).OR.(ITAPE(I).EQ.4).OR.(ITAPE(I).EQ.9))
                 1  GO TO 6010
0135              IF(ITAPE(I).EQ.1)GO TO 6011
0136              IF(ITAPE(I).EQ.0)GO TO 6012
0137              GO TO 99999
0138         6010 SW14  =.TRUE.
0139              SW15  =.FALSE.
0140              SW16  =.FALSE.
0141              GO TO 99999
0142         6011 SW16  =.TRUE.
0143              SW15  =.FALSE.
0144              SW14  =.FALSE.
0145              GO TO 99999
0146         6012 ITAPE(I)=2
0147              CALL SHOW
0148              SW15  =.TRUE.
0149              SW16  =.FALSE.
0150              SW14  =.FALSE.
0151              GO TO 99999
            C L14
0152           14 CONTINUE
0153              GO TO 6009
0154         8003 CONTINUE
0155              GO TO 99999
            C L15
0156           15 CONTINUE
0157         6014 I=I-1
0158              CALL SHOW
0159              WRITE(NPTR,7004)I
0160              IF(ITAPE(I).EQ.3)GO TO 6013
0161              SW10  =.TRUE.
0162              SW11  =.FALSE.
0163              GO TO 99999
0164         6013 SW11  =.TRUE.
0165              SW10  =.FALSE.
0166              GO TO 99999
            C L10
0167           10 CONTINUE
0168              GO TO 6014
0169         8004 CONTINUE
0170              GO TO 99999
            C L11
0171           11 CONTINUE
0172              GO TO 6008
0173         8005 CONTINUE
0174              GO TO 99999
            C L16
0175           16 CONTINUE
0176         6015 I=I+1
0177              CALL SHOW
0178              WRITE(NPTR,7004)I
0179              IF(ITAPE(I).EQ.3)GO TO 6016
0180              IF(ITAPE(I).EQ.9)GO TO 6017
0181              IF(ITAPE(I).EQ.0)GO TO 6018
0182              IF(ITAPE(I).EQ.1)GO TO 6019
0183              GO TO 99999
0184         6018 ITAPE(I)=2
0185              CALL SHOW
```

```
 6020 SW12  =.TRUE.
      SW13  =.FALSE.
      SW19  =.FALSE.
      GO TO 99999
 6016 SW19  =.TRUE.
      SW12  =.FALSE.
      SW13  =.FALSE.
      GO TO 99999
 6017 SW13  =.TRUE.
      SW12  =.FALSE.
      SW19  =.FALSE.
      GO TO 99999
 6019 ITAPE(I)=4
      CALL SHOW
      GO TO 6020
 8006 CONTINUE
      GO TO 99999
C L12
   12 CONTINUE
      GO TO 6015
 8007 CONTINUE
      GO TO 99999
C L13
   13 CONTINUE
      GO TO 6002
 8008 CONTINUE
      GO TO 99999
C L19
   19 CONTINUE
      WRITE(NPTR,7003)
 7003 FORMAT(' ','ERROR CONDITION TERMINATION L19')
      CALL SHOW
      GO TO 99999
C L06
    6 CONTINUE
 6021 I=I+1
      CALL SHOW
      WRITE(NPTR,7004)I
      IF((ITAPE(I).EQ.2).OR.(ITAPE(I).EQ.4).OR.(ITAPE(I).EQ.9))
     1   GO TO 6022
      IF(ITAPE(I).EQ.0)GO TO 6023
      IF(ITAPE(I).EQ.1)GO TO 6024
      GO TO 99999
 6022 SW7  =.TRUE.
      SW9  =.FALSE.
      SW8=.FALSE.
      GO TO 99999
 6023 SW8  =.TRUE.
      SW7  =.FALSE.
      SW9  =.FALSE.
      GO TO 99999
 6024 ITAPE(I)=4
      CALL SHOW
      SW9  =.TRUE.
      SW8  =.FALSE.
      SW7  =.FALSE.
      GO TO 99999
C L07
    7 CONTINUE
      GO TO 6021
 8009 CONTINUE
      GO TO 99999
C L08
    8 CONTINUE
      GO TO 6015
 8010 CONTINUE
      GO TO 99999
C L09
    9 CONTINUE
      GO TO 6014
99999 RETURN
      END
```

```
FORTRAN IV G LEVEL  20                    SHOW                DATE = 72168          20/29/47

0001                SUBROUTINE SHOW
0002                COMMON/BLK1/ ITAPE,I,NPTR,
                   1   SW1,SW2,SW3,SW4,SW5,SW6,SW7,SW8,SW9,SW10,SW11,SW12,SW13,SW14,
                   1   SW15,SW16,SW17,SW18,SW19
0003                LOGICAL*1
                   1   SW1,SW2,SW3,SW4,SW5,SW6,SW7,SW8,SW9,SW10,SW11,SW12,SW13,SW14,
                   1   SW15,SW16,SW17,SW18,SW19
0004                DIMENSION ITAPE(100)
0005                WRITE(NPTR,7001)(ITAPE(J1),J1=2,4),(ITAPE(J2),J2=6,11),(ITAPE(J3),
                   1 J3=13,18),(ITAPE(J4),J4=20,25),(ITAPE(J5),J5=27,32),
                   1 (ITAPE(J6),J6=34,39)
0006           7001 FORMAT('0',' Y',3I2,' X',6I2,' X',6I2,' X',6I2,
                   1                    ' X',6I2,' X',6I2,' Y')
0007                RETURN
0008                END
```

```
FORTRAN IV G LEVEL  20                    BLK DATA            DATE = 72158          20/29/47

0001                BLOCK DATA
0002                COMMON/BLK1/ ITAPE,I,NPTR,
                   1   SW1,SW2,SW3,SW4,SW5,SW6,SW7,SW8,SW9,SW10,SW11,SW12,SW13,SW14,
                   1   SW15,SW16,SW17,SW18,SW19
0003                DIMENSION ITAPE(100)
0004                LOGICAL*1
                   1   SW1,SW2,SW3,SW4,SW5,SW6,SW7,SW8,SW9,SW10,SW11,SW12,SW13,SW14,
                   1   SW15,SW16,SW17,SW18,SW19
0005                DATA SW1,SW2,SW3,SW4,SW5,SW6,SW7,SW8,SW9,SW10,SW11,SW12,SW13,
                   1  SW14,SW15,SW16,SW17,SW18,SW19
                   1  /.FALSE.,.FALSE.,.FALSE.,.FALSE.,.FALSE.,.FALSE.,.FALSE.,
                   1   .FALSE.,.FALSE.,.FALSE.,.FALSE.,.FALSE.,.FALSE.,.FALSE.,
                   1   .FALSE.,.FALSE.,.FALSE.,.FALSE.,.FALSE./
0006                DATA NPTR/6/
0007                DATA I/5/
0008                DATA ITAPE/3,0,1,1,9,0,0,1,1,0,1,9,0,1,0,1,1,0,9,0,1,1,1,0,0,9,
                   1                    0,0,0,0,0,0,9,0,0,0,0,0,0,3   /
0009                END
```

INITIAL TAPE CONDITION

Y 0 1 1 X 0 0 1 1 0 1 X 0 1 0 1 1 0 X 0 1 1 1 0 0 X 0 0 0 0 0 0 X 0 0 0 0 0 0 Y

ENDING TAPE CONDITION

Y 0 1 1 X 2 2 4 4 2 4 X 2 4 2 4 4 2 X 2 4 4 1 0 0 X 0 0 0 0 0 0 X 0 0 0 0 0 0 Y

*** END OF MODEL CYCLING ***

FINAL MODEL REPRESENTATION (PAGE 1)

	SUBSYSTEMS					SYSTEM-STATES					TRANSITIONS						
LINE	USER SYMBOL	RHO	DELTA	GAMMA		USER SYMBOL	ETA	MU	ALPHA	STATUS	USER SYMBOL	KAPPA	ETA(J)= ETA	LINE	BETA	TAU	R
1	MACH	1	1	2													
2						I02	2	0	+	IW							
3											L20	20	1	31	-1	0	0
4						T03	11	1	+	X							
5						T02	10	1	+	X							
6						T01	9	1	+	IW							
7						S06	8	1	+	IW							
8											L12	12	8	7	-1	1	0
9											L13	13	3	29	-1	1	0
10											L19	19	11	4	-1	1	0
11						S05	7	1	+	IW							
12											L10	10	7	11	-1	1	0
13											L11	11	4	22	-1	1	0
14						S04	6	1	+	IW							
15											L07	7	6	14	-1	1	0
16											L08	8	8	7	-1	1	0
17											L09	9	7	11	-1	1	0
18						S03	5	1	+	IW							
19											L14	14	5	18	-1	1	0
20											L15	15	7	11	-1	1	0
21											L16	16	8	7	-1	1	0
22						S02	4	1	+	IW							
23											L03	3	4	22	-1	1	0
24											L04	4	9	6	-1	1	0
25											L05	5	5	18	-1	1	0
26											L06	6	6	14	-1	1	0
27											L18	18	10	5	-1	1	0
28						S01	3	1	+	IW							
29											L01	1	3	28	-1	1	0
30											L02	2	4	22	-1	1	0
31						I01	1	1	+	IW							
32											L17	17	3	23	1	1	0

11. APPENDIX D Critical Path Program

11.1 Direct Map Approach

```
*****************************************************************************
                          MODEL REPRESENTATION INPUT
*****************************************************************************
L     CPM                 1       1
W     I01   CPM           0       .
W     S01   CPM           2       .
W     S02   CPM           2       .
W     S03   CPM           2       .
W     S04   CPM           2       .
W     S05   CPM           2       .
W     S06   CPM           2       .
W     S07   CPM           2       .
W     S08   CPM           2       .
W     S09   CPM           2       .
W     S10   CPM           2       .
W     S11   CPM           2       .
W     S12   CPM           2       .
W     S13   CPM           2       .
W     S14   CPM           2       .
W     S15   CPM           2       .
W     S16   CPM           2       .
W     S17   CPM           2       .
W     S18   CPM           2       .
W     T02   CPM           1       .
W     X02   CPM           1       .
W     I02   CPM           0       .
X     L01   I01   S01     1       0
X     L02   S01   S02     1       4
X     L03   S01   S03     1       3
X     L04   S01   S04     1       6
X     L05   S02   S05     1       3
X     L06   S02   S06     1       2
X     L07   S03   S06     1       1
X     L08   S04   S06     1       2
X     L09   S04   S07     1       4
X     L10   S05   S06     1       1
X     L11   S05   S08     1       3
X     L12   S06   S09     1       1
X     L13   S09   S08     1       3
X     L14   S08   S11     1       2
X     L15   S08   S12     1       5
X     L16   S08   S10     1       4
X     L17   S07   S10     1       2
X     L18   S11   S15     1       1
X     L19   S15   S18     1       3
X     L20   S12   S14     1       5
X     L21   S14   S16     1       7
X     L22   S12   S13     1       6
X     L23   S13   S17     1       2
X     L24   S12   S10     1       7
X     L25   S10   S17     1       5
X     L26   S17   S18     1       4
X     L27   S02   S04     1       3
X     L28   S14   S10     1       7
X     L29   S14   S13     1       7
X     L30   I02   X02     1       0
X     L31   X02   T02     1       1       -1
./
I     I01
I     I02
./
OMDRP
OSYML
OSACT
CANTR CPM
T     45
```

INITIAL MODEL REPRESENTATION (PAGE 1)

	SUBSYSTEMS				SYSTEM-STATES					TRANSITIONS						
LINE	USER SYMBOL	RHO	DELTA	GAMMA	USER SYMBOL	ETA	MU	ALPHA	STATUS	USER SYMBOL	KAPPA	ETA(J)= ETA	LINE	BETA	TAU	PHI
1	CPM	1	1	1												
2					I02	22	0	.	IW							
3										L30	30	21	52	1	0	0
4					I01	1	0	.	IW							
5										L01	1	2	48	1	0	0
6					S18	19	2	.	X							
7					S17	18	2	.	IW							
8										L26	26	19	6	1	4	0
9					S16	17	2	.	X							
10					S15	16	2	.	IW							
11										L19	19	19	6	1	3	0
12					S14	15	2	.	IW							
13										L21	21	17	9	1	7	0
14										L28	28	11	24	1	7	0
15										L29	29	14	15	1	7	0
16					S13	14	2	.	IW							
17										L23	23	18	7	1	2	0
18					S12	13	2	.	IW							
19										L20	20	15	12	1	5	0
20										L22	22	14	16	1	6	0
21										L24	24	11	24	1	7	0
22					S11	12	2	.	IW							
23										L18	18	16	10	1	1	0
24					S10	11	2	.	IW							
25										L25	25	18	7	1	5	0
26					S09	10	2	.	IW							
27										L13	13	9	28	1	3	0
28					S08	9	2	.	IW							
29										L14	14	12	22	1	2	0
30										L15	15	13	18	1	5	0
31										L16	16	11	24	1	4	0
32					S07	8	2	.	IW							
33										L17	17	11	24	1	2	0
34					S06	7	2	.	IW							
35										L12	12	10	26	1	1	0
36					S05	6	2	.	IW							
37										L10	10	7	34	1	1	0
38										L11	11	9	28	1	3	0
39					S04	5	2	.	IW							
40										L08	8	7	34	1	2	0
41										L09	9	8	32	1	4	0
42					S03	4	2	.	IW							
43										L07	7	7	34	1	1	0
44					S02	3	2	.	IW							
45										L05	5	6	35	1	3	
46										L06	6	7	34	1	2	
47										L27	27	5	39	1	3	
48					S01	2	2	.	IW							
49										L02	2	3	44	1	4	
50										L03	3	4	42	1	3	
51										L04	4	5	39	1	6	

INITIAL MODEL REPRESENTATION (PAGE 2)

	SUBSYSTEMS				SYSTEM-STATES					TRANSITIONS						
LINE	USER SYMBOL	RHO	DELTA	GAMMA	USER SYMBOL	ETA	MU	ALPHA	STATUS	USER SYMBOL	KAPPA	ETA(J)= ETA	LINE	BETA	TAU	P
52					X02	21	1	.	IW							
53										L31	31	20	54	1	1	
54					T02	20	1	.	X							

```
0001          SUBROUTINE BTP(88383,TTTTT,YYYYY,*)
0002          IMPLICIT INTEGER*2(T),LOGICAL*1(B)
0003          COMMON/TERM/CT
0004          COMMON/LAMBDA/LDELT(100),LQT(100)
0005          INTEGER*4 CT
0006          COMMON/CHI3/ KJ(1000),KREMAN(1000),KNXTRW(1000)
0007          COMMON/OMEGA/ QREAR,QFRONT,NNEXT(500),NPRIOO,NPRIO(500),
             1            NSTAT(400),N1STRW(400)
0008          INTEGER*2 NNEXT,NPRIO,NSTAT,N1STRW,KNXTRW,KREMAN,QFRONT,QREAR,
             1  NPRIOO,KJ
0009          INTEGER*2 KREMAX
0010          INTEGER*2 LRHOX,NPRIOX,N,S,NX,KX,KTIME
0011          DIMENSION LIME(100),TETA(100),TATUS(100)
0012          DATA LIME,TETA,TATUS /100*0,100*0,100*0/
0013          DATA NPTR/6/
0014          INTEGER*2 XXXXX,YYYYY,ZZZZZ,L
0015          COMMON/CHI1/B(3000),T(1000),L(1000)
0016          ZZZZZ=YYYYY+180
0017          ZZZZZ=ZZZZZ-180
0018          GO TO (
             1          31,  31,  31,  31,  31,  31,  31,  31,  31,  31
             1                                                          ),ZZZZZ
0019          RETURN 1
        C L31
0020       31 CONTINUE
0021          CT=LQT(1)
0022          WRITE(NPTR,7004)
0023     7004 FORMAT('1','      SYSTEM STATE ACTIVITY'//
             1   12X,   'LINE          TIME          ETA          STATUS'//)
0024          I=1
0025     6001 READ(11,END=6003)LQTX,LRHOX,NPRIOX,N,S,NX
0026     7001 FORMAT(' ',8I14.7)
0027          IF(NPRIOX.EQ.1)GO TO 6003
0028          LIME(I)=LQTX
0029          TETA(I)=N
0030          TATUS(I)=S
0031          WRITE(NPTR,7001)I,LIME(I),TETA(I),TATUS(I)
0032          I=I+1
0033          IF(NX.EQ.0)GO TO 6001
0034          DO 6002 J=1,NX
0035          READ(11,END=6003)KX,KTIME,KREMAX
0036     6002 CONTINUE
0037          GO TO 6001
0038     6003 ICLOCK=LIME(I-1)
0039          WRITE(NPTR,7005)
0040     7005 FORMAT('1','      CRITICAL PATH'//
             1  '       TIME ENTERED       ETA'//)
0041          I=I-1
```

```
0042        6004 IF(LIME(I).EQ.ICLOCK)GO TO 6005
0043             WRITE(NPTR,7002)
0044        7002 FORMAT('  ERROR1')
0045             GO TO 99999
0046        6005 IF(TATUS(I).EQ.6)GO TO 6006
0047             I=I-1
0048             GO TO 6004
0049        6006 IHO=TETA(I)
0050        6007 WRITE(NPTR,7001)ICLOCK,IHO
0051        6008 I=I-1
0052             IF(LIME(I).EQ.ICLOCK)GO TO 6009
0053             WRITE(NPTR,7003)
0054        7003 FORMAT('  ERROR2')
0055             GO TO 99999
0056        6009 IF((TATUS(I).EQ.8).OR.(TATUS(I).EQ.1))GO TO 6010
0057             GO TO 6008
0058        6010 ITL=TETA(I)
0059        6015 IF(I.EQ.1)GO TO 6011
0060             I=I-1
0061             IF(LIME(I).EQ.ICLOCK)GO TO 6012
0062             GO TO 6013
0063        6012 IF((TATUS(I).EQ.8).OR.(TATUS(I).EQ.1))GO TO 6014
0064             GO TO 6015
0065        6014 N=IHO
0066             NTEST=TETA(I)
0067             K1=N1STRW(NTEST)
0068        6016 IF(KJ(K1).EQ.N)GO TO 6018
0069             K1=KNXTRW(K1)
0070             IF(K1.EQ.0)GO TO 6013
0071             GO TO 6016
0072        6018 ITL=TETA(I)
0073        6013 IF(I.EQ.1)GO TO 6011
0074             IF((TETA(I).EQ.ITL).AND.(TATUS(I).EQ.6))GO TO 6019
0075             I=I-1
0076             GO TO 6013
0077        6019 IHO=TETA(I)
0078             ICLOCK=LIME(I)
0079             GO TO 6007
0080        6011 ICLOCK=0
0081             WRITE(NPTR,7001)ICLOCK,ITL
0082             GO TO 99999
0083       99999 RETURN
0084             END
```

SYMBOL LISTS

RHO	L-NAME	RHO	L-NAME	RHO	L-NAME	RHO	L-NAME
1	CPM						

ETA	W-NAME	ETA	W-NAME	ETA	W-NAME	ETA	W-NAME
1	I01	7	S06	13	S12	18	S17
2	S01	8	S07	14	S13	19	S18
3	S02	9	S08	15	S14	20	T02
4	S03	10	S09	16	S15	21	X02
5	S04	11	S10	17	S16	22	I02
6	S05	12	S11				

KAPPA	X-NAME	KAPPA	X-NAME	KAPPA	X-NAME	KAPPA	X-NAME
1	L01	9	L09	17	L17	25	L25
2	L02	10	L10	18	L18	26	L26
3	L03	11	L11	19	L19	27	L27
4	L04	12	L12	20	L20	28	L28
5	L05	13	L13	21	L21	29	L29
6	L06	14	L14	22	L22	30	L30
7	L07	15	L15	23	L23	31	L31
8	L08	16	L16	24	L24		

CRITICAL PATH

TIME ENTERED	ETA
39	19
35	18
30	11
23	15
18	13
13	9
10	10
9	7
7	5
4	3
0	2

TIME	SUBSYSTEM SYMBOL	RHO	SYSTEM-STATE SYMBOL	ETA	MU	STATUS	TRANSITIONS SYMBOL	KAPPA	TAU	R
3	CPM	1	S01	2	2	(A)				
							L02	2	4	1
							L03	3	3	0
							L04	4	6	3
			S03	4		PW				
			S03	4		A				
							L07	7	1	1
4	CPM	1	S03	4	2	IW				
			S01	2		(A)				
							L02	2	4	0
							L04	4	6	2
			S02	3		PW				
			S02	3		A				
							L05	5	3	3
							L06	6	2	2
							L27	27	3	3
6	CPM	1	S02	3	2	(A)				
							L05	5	3	1
							L06	6	2	0
							L27	27	3	1
			S01	2		IW				
7	CPM	1	S02	3	2	IW				
			S05	6		PW				
			S04	5		PW				
			S05	6		A				
							L10	10	1	1
							L11	11	3	3
			S04	5		A				
							L08	8	2	2
							L09	9	4	4
8	CPM	1	S05	6	2	(A)				
							L10	10	1	0
							L11	11	3	2
9	CPM	1	S04	5	2	(A)				
							L08	8	2	0
							L09	9	4	2
			S06	7		PW				
			S06	7		A				
							L12	12	1	1
10	CPM	1	S06	7	2	IW				
			S05	6		IW				
			S09	10		PW				
			S09	10		A				
							L13	13	3	3
11	CPM	1	S04	5	2	IW				
			S07	8		PW				
			S07	8		A				
							L17	17	2	2
13	CPM	1	S09	10	2	IW				
			S07	8		IW				
			S03	9		PW				
			S03	9		A				

TIME	SUBSYSTEM SYMBOL	RHO	SYSTEM-STATE SYMBOL	ETA	MU	STATUS	TRANSITIONS SYMBOL	KAPPA	TAU	R
							L14	14	2	2
							L15	15	5	5
							L16	16	4	4
15	CPM	1	S08	9	2	(A)				
							L14	14	2	0
							L15	15	5	3
							L16	16	4	2
			S11	12		PW				
			S11	12		A				
							L18	18	1	1
16	CPM	1	S11	12	2	IW				
			S15	16		PW				
			S15	16		A				
							L19	19	3	3
17	CPM	1	S08	9	2	(A)				
							L15	15	5	1
							L16	16	4	0
18	CPM	1	S08	9	2	IW				
			S12	13		PW				
			S12	13		A				
							L20	20	5	5
							L22	22	6	6
							L24	24	7	7
19	CPM	1	S15	16	2	IW				
23	CPM	1	S12	13	2	(A)				
							L20	20	5	0
							L22	22	6	1
							L24	24	7	2
			S14	15		PW				
			S14	15		A				
							L21	21	7	7
							L23	23	7	7
							L29	29	7	7
24	CPM	1	S12	13	2	(A)				
							L22	22	6	0
							L24	24	7	1
25	CPM	1	S12	13	2	IW				
30	CPM	1	S14	15	2	IW				
			S16	17		PW				
			S13	14		PW				
			S10	11		PW				
			S16	17		A				
			S16	17		IW				
			S13	14		A				
							L23	23	2	2
			S10	11		A				
							L25	25	5	5
32	CPM	1	S13	14	2	IW				
35	CPM	1	S10	11	2	IW				
			S17	18		PW				
			S17	18		A				
							L25	25	4	4
39	CPM	1	S17	18	2	IW				
			S18	19		PW				
			S18	19		A				
			S18	19		IW				
			X02	21	1	A				
							L31	31	1	1
40	CPM	1	X02	21	1	IW				
			T02	20		PW				
			T02	20		A				
			T02	20		IW				

*** END OF MODEL CYCLING ***

11.2 Subsystem Approach

```
*****************************************************************************
                          MODEL REPRESENTATION INPUT
*****************************************************************************
L     STRU                1        1
L     PIPE                1        1
L     ELEC                1        1
W     S01   STRU          2        .
W     S02   STRU          2        .
W     S03   STRU          2        .
W     S04   STRU          2        .
W     S05   STRU          2        .
W     S06   PIPE          2        .
W     S07   PIPE          2        .
W     S08   ELEC          2        .
W     S09   ELEC          2        .
W     S10   ELEC          2        .
W     S11   ELEC          2        .
W     S12   STRU          2        .
W     S13   STRU          2        .
W     S14   STRU          2        .
W     S15   STRU          2        .
W     S16   STRU          2        .
W     S17   ELEC          2        .
W     S18   ELEC          2        .
W     S19   PIPE          2        .
W     S20   STRU          2        .
W     S21   STRU          2        .
W     S22   PIPE          2        .
W     S23   STRU          2        .
W     S24   STRU          2        .
W     S25   STRU          2        .
W     T01   STRU          2        .
W     I01   STRU          0        .
W     I02   PIPE          0        .
W     I03   ELEC          0        .
W     I04   STRU          0        .
W     X04   STRU          1        .
W     T04   STRU          1        .
X     L01   S01   S03     1        4
X     L02   S01   S02     1        4
X     L03   S03   S05     1        3
X     L04   S03   S04     1        3
X     L05   S03   S09     1        3
X     L06   S03   S10     1        3
X     L07   S05   S13     1        3
X     L08   S05   S15     1        3
X     L09   S05   S14     1        3
X     L10   S13   S23     1        2
X     L11   S23   S24     1        1
X     L12   S02   S12     1        2
X     L13   S04   S12     1        1
X     L14   S10   S12     1        2
X     L15   S07   S12     1        1
X     L16   S12   S16     1        1
X     L17   S16   S13     1        3
X     L18   S16   S15     1        3
X     L19   S16   S14     1        3
X     L20   S15   S20     1        5
X     L21   S15   S18     1        5
```

```
X     L22   S15   S19   1     5
X     L23   S20   S21   1     5
X     L24   S21   S17   1     7
X     L25   S21   S22   1     7
X     L26   S06   S07   1     3
X     L27   S19   S22   1     6
X     L28   S22   S25   1     2
X     L29   S03   S10   1     6
X     L30   S08   S09   1     6
X     L31   S09   S11   1     4
X     L32   S11   S17   1     2
X     L33   S14   S17   1     4
X     L34   S17   S25   1     5
X     L35   S18   S17   1     7
X     L36   I01   S01   1     0
X     L37   I02   S06   1     0
X     L38   I03   S08   1     0
X     L39   S25   T01   1     4
X     L40   S21   S25   1     1
X     L41   S07   S19   1     1
X     L42   S11   S18   1     1
X     L43   I04   X04   1     0
X     L44   X04   T04   1     1        -1
./
I     I01
I     I02
I     I03
I     I04
./
OMORP
OSYML
OSACT
OMNTR STRU
OMNTR PIPE
OMNTR ELEC
T     45
```

```
FORTRAN IV G LEVEL  20                    BTP                    DATE = 72168          20/45/28

0001                SUBROUTINE BTP(88388,TTTTT,YYYYY,*)
0002                IMPLICIT INTEGER*2(T),LOGICAL*1(B)
0003                COMMON/TERM/CT
0004                COMMON/LAMBDA/LDELT(100),LQT(100)
0005                INTEGER*4 CT
0006                INTEGER*2 XXXXX,YYYYY,ZZZZZ,L
0007                COMMON/CHI1/B(3000),T(1000),L(1000)
0008                ZZZZZ=YYYYY+180
0009                ZZZZZ=ZZZZZ-180
0010               GO TO (
                  1          44,  44,  44,  44,  44,  44,  44,  44,  44,  44
                  1                                                          ),ZZZZZ
0011                RETURN 1
              C L44
0012             44 CONTINUE
0013                CALL OUTPUT
0014                CT=LQT(1)
0015          99999 RETURN
0016                END
```

```
0001          SUBROUTINE OUTPUT
0002          DIMENSION LIME(100),TETA(100),TATUS(100)
0003          INTEGER*2 LRHOX,NPRIOX,N,S,NX,KX,KTIME
0004          INTEGER*2 KREMAX
0005          INTEGER TETA,TATUS
0006          DATA LIME,TETA,TATUS /100*0,100*0,100*0/
0007          COMMON/CHIB/ KJ(1000),KREMAN(1000),KNXTRW(1000)
0008          COMMON/OMEGA/ QREAR,QFRONT,NNEXT(500),NPRIOO,NPRIO(500),
             1            NSTAT(400),NISTRW(400)
0009          INTEGER*2 NNEXT,NPRIO,NSTAT,NISTRW,KNXTRW,KREMAN,QFRONT,QREAR,
             1  NPRIOO,KJ
0010          NPTR=6
0011          WRITE(NPTR,7004)
0012     7004 FORMAT('1','         SYSTEM STATE ACTIVITY'//
             1   12X,   'LINE          TIME          ETA          STATUS'//)
0013          I=1
0014     6001 READ(11,END=6003)LQTX,LRHOX,NPRIOX,N,S,NX
0015     7001 FORMAT(' ',8G14.7)
0016          IF(NPRIOX.EQ.1)GO TO 6003
0017          LIME(I)=LQTX
0018          TETA(I)=N
0019          TATUS(I)=S
0020          WRITE(NPTR,7001)I,LIME(I),TETA(I),TATUS(I)
0021          I=I+1
0022          IF(NX.EQ.0)GO TO 6001
0023          DO 6002 J=1,NX
0024          READ(11,END=6003)KX,KTIME,KREMAX
0025     6002 CONTINUE
0026          GO TO 6001
0027     6003 ICLOCK=LIME(I-1)
0028          WRITE(NPTR,7005)
0029     7005 FORMAT('1','        CRITICAL PATH'//
             1  '        TIME ENTERED        ETA'//)
0030          I=I-1
0031     6004 IF(LIME(I).EQ.ICLOCK)GO TO 6005
0032          WRITE(NPTR,7002)
0033     7002 FORMAT('  ERROR1')
0034          GO TO 99999
0035     6005 IF(TATUS(I).EQ.6)GO TO 6006
0036          I=I-1
0037          GO TO 6004
0038     6006 IHO=TETA(I)
0039     6007 WRITE(NPTR,7001)ICLOCK,IHO
0040     6008 I=I-1
0041          IF(LIME(I).EQ.ICLOCK)GO TO 6009
0042          WRITE(NPTR,7003)
0043     7003 FORMAT('  ERROR2')
0044          GO TO 99999
0045     6009 IF((TATUS(I).EQ.8).OR.(TATUS(I).EQ.1))GO TO 6010
0046          GO TO 6008
0047     6010 ITL=TETA(I)
0048     6015 IF(I.EQ.1)GO TO 6011
0049          I=I-1
0050          IF(LIME(I).EQ.ICLOCK)GO TO 6012
0051          GO TO 6013
0052     6012 IF((TATUS(I).EQ.8).OR.(TATUS(I).EQ.1))GO TO 6014
0053          GO TO 6015
0054     6014 N=IHO
0055          NTEST=TETA(I)
0056          K1=NISTRW(NTEST)
0057     6016 IF(KJ(K1).EQ.N)GO TO 6018
0058          K1=KNXTRW(K1)
0059          IF(K1.EQ.0)GO TO 6013
0060          GO TO 6016
0061     6018 ITL=TETA(I)
0062     6013 IF(I.EQ.1)GO TO 6011
0063          IF((TETA(I).EQ.ITL).AND.(TATUS(I).EQ.6))GO TO 6019
0064          I=I-1
0065          GO TO 6013
0066     6019 IHO=TETA(I)
0067          ICLOCK=LIME(I)
0068          GO TO 6007
0069     6011 ICLOCK=0
0070          WRITE(NPTR,7001)ICLOCK,ITL
0071          GO TO 99999
0072    99999 RETURN
0073          END
```

INITIAL MODEL REPRESENTATION (PAGE 1)

	SUBSYSTEMS				SYSTEM-STATES					TRANSITIONS						
LINE	USER SYMBOL	RHO	DELTA	GAMMA	USER SYMBOL	ETA	MU	ALPHA	STATUS	USER SYMBOL	KAPPA	ETA(J)= ETA	LINE	BETA	TAU	PHI
1	STRU	1	1	1												
2					I04	30	0	.	IW							
3										L43	43	31	49	1	0	0
4					I01	27	0	.	IW							
5										L36	36	1	45	1	0	0
6					T01	26	2	.	X							
7					S25	25	2	.	IW							
8										L39	39	25	6	1	4	0
9					S24	24	2	.	X							
10					S23	23	2	.	IW							
11										L11	11	24	9	1	1	0
12					S21	21	2	.	IW							
13										L24	24	17	68	1	7	0
14										L25	25	22	54	1	7	0
15										L40	40	25	7	1	1	0
16					S20	20	2	.	IW							
17										L23	23	21	12	1	5	0
18					S16	16	2	.	IW							
19										L17	17	13	28	1	3	0
20										L18	18	15	22	1	3	0
21										L19	19	14	25	1	3	0
22					S15	15	2	.	IW							
23										L20	20	20	16	1	5	0
24										L21	21	18	66	1	5	0
25										L22	22	19	55	1	5	0
26					S14	14	2	.	IW							
27										L33	33	17	68	1	4	0
28					S13	13	2	.	IW							
29										L10	10	23	10	1	2	0
30					S12	12	2	.	IW							
31										L16	16	16	18	1	1	0
32					S05	5	2	.	IW							
33										L07	7	13	28	1	3	0
34										L08	8	15	22	1	3	0
35										L09	9	14	25	1	3	0
36					S04	4	2	.	IW							
37										L13	13	12	30	1	1	0
38					S03	3	2	.	IW							
39										L03	3	5	32	1	3	0
40										L04	4	4	35	1	3	0
41										L05	5	9	75	1	3	0
42										L06	6	10	73	1	3	0
43					S02	2	2	.	IW							
44										L12	12	12	30	1	2	0
45					S01	1	2	.	IW							
46										L01	1	3	33	1	4	0
47										L02	2	2	43	1	4	0
48					T04	32	1	.	X							
49					X04	31	1	.	IW							
50										L44	44	32	48	1	1	-1
51	PIPE	2	1	1												

INITIAL MODEL REPRESENTATION (PAGE 2)

	SUBSYSTEMS				SYSTEM-STATES					TRANSITIONS						
LINE	USER SYMBOL	RHO	DELTA	GAMMA	USER SYMBOL	ETA	MU	ALPHA	STATUS	USER SYMBOL	KAPPA	ETA(J): ETA	LINE	BETA	TAU	PHI
52					I02	28	0	.	IW							
53										L37	37	6	61	1	0	0
54					S22	22	2	.	IW							
55										L28	28	25	7	1	2	0
56					S19	19	2	.	IW							
57										L27	27	22	54	1	6	0
58					S07	7	2	.	IW							
59										L15	15	12	30	1	1	0
60										L41	41	19	56	1	1	0
61					S06	6	2	.	IW							
62										L26	26	7	58	1	3	0
63	ELEC	3	1	1												
64					I03	29	0	.	IW							
65										L38	38	8	77	1	0	0
66					S18	18	2	.	IW							
67										L35	35	17	68	1	7	0
68					S17	17	2	.	IW							
69										L34	34	25	7	1	5	0
70					S11	11	2	.	IW							
71										L32	32	17	63	1	2	0
72										L42	42	18	66	1	1	0
73					S10	10	2	.	IW							
74										L14	14	12	30	1	2	0
75					S09	9	2	.	IW							
76										L31	31	11	70	1	4	0
77					S08	8	2	.	IW							
78										L29	29	10	73	1	6	0
79										L30	30	9	75	1	6	0

SYMBOL LISTS

RHO	L-NAME	RHO	L-NAME	RHO	L-NAME	RHO	L-NAME
1	STRU	2	PIPE	3	ELEC		

ETA	W-NAME	ETA	W-NAME	ETA	W-NAME	ETA	W-NAME
1	S01	9	S09	17	S17	25	S25
2	S02	10	S10	18	S18	26	T01
3	S03	11	S11	19	S19	27	I01
4	S04	12	S12	20	S20	28	I02
5	S05	13	S13	21	S21	29	I03
6	S06	14	S14	22	S22	30	I04
7	S07	15	S15	23	S23	31	X04
8	S08	16	S16	24	S24	32	T04

KAPPA	X-NAME	KAPPA	X-NAME	KAPPA	X-NAME	KAPPA	X-NAME
1	L01	12	L12	23	L23	34	L34
2	L02	13	L13	24	L24	35	L35
3	L03	14	L14	25	L25	36	L36
4	L04	15	L15	26	L26	37	L37
5	L05	16	L16	27	L27	38	L38
6	L06	17	L17	28	L28	39	L39
7	L07	18	L18	29	L29	40	L40
8	L08	19	L19	30	L30	41	L41
9	L09	20	L20	31	L31	42	L42
10	L10	21	L21	32	L32	43	L43
11	L11	22	L22	33	L33	44	L44

CRITICAL PATH

TIME ENTERED	ETA
39	26
35	25
30	17
23	21
18	20
13	15
10	16
9	12
7	10
4	3
0	1

TIME	SUBSYSTEM SYMBOL	RHO	SYSTEM-STATE SYMBOL	ETA	MU	STATUS	TRANSITIONS SYMBOL	KAPPA	TAU	R
3	PIPE	2	S06	6	2	IW				
			S07	7		PW				
			S07	7		A				
							L15	15	1	1
							L41	41	1	1
4	STRU	1	S01	1	2	IW				
	PIPE	2	S07	7	2	IW				
	STRU	1	S03	3	2	PW				
			S02	2		PW				
			S03	3		A				
							L03	3	3	3
							L04	4	3	3
							L05	5	3	3
							L06	6	3	3
			S02	2		A				
							L12	12	2	2
6	STRU	1	S02	2	2	IW				
	ELEC	3	S08	8	2	IW				
7	STRU	1	S03	3	2	IW				
			S05	5		PW				
			S04	4		PW				
	ELEC	3	S10	10	2	PW				
			S09	9		PW				
	STRU	1	S05	5	2	A				
							L07	7	3	3
							L08	8	3	3
							L09	9	3	3
			S04	4		A				
							L13	13	1	1
	ELEC	3	S10	10	2	A				
							L14	14	2	2
			S09	9		A				
							L31	31	4	4
8	STRU	1	S04	4	2	IW				
9	ELEC	3	S10	10	2	IW				
	STRU	1	S12	12	2	PW				
			S12	12		A				
							L15	15	1	1
10	STRU	1	S12	12	2	IW				
			S05	5		IW				
			S16	16		PW				
			S16	16		A				
							L17	17	3	3
							L18	18	3	3
							L19	19	3	3
11	ELEC	3	S09	9	2	IW				
			S11	11		PW				
			S11	11		A				
							L32	32	2	2
							L42	42	1	1
12	ELEC	3	S11	11	2	(A)				
							L32	32	2	1

TIME	SUBSYSTEM SYMBOL	RHO	SYSTEM-STATE SYMBOL	ETA	MU	STATUS	TRANSITIONS SYMBOL	KAPPA	TAU	R
							L42	42	1	0
13	STRU	1	S16	16	2	IW				
	ELEC	3	S11	11	2	IW				
	STRU	1	S15	15	2	PW				
			S14	14		PW				
			S13	13		PW				
			S15	15		A				
							L20	20	5	5
							L21	21	5	5
							L22	22	5	5
			S14	14		A				
							L33	33	4	4
			S13	13		A				
							L10	10	2	2
15	STRU	1	S13	13	2	IW				
			S23	23		PW				
			S23	23		A				
							L11	11	1	1
16	STRU	1	S23	23	2	IW				
			S24	24		PW				
			S24	24		A				
			S24	24		IW				
17	STRU	1	S14	14	2	IW				
18	STRU	1	S15	15	2	IW				
			S20	20		PW				
	PIPE	2	S19	19	2	PW				
	ELEC	3	S18	18	2	PW				
	STRU	1	S20	20	2	A				
							L23	23	5	5
	PIPE	2	S19	19	2	A				
							L27	27	6	6
	ELEC	3	S18	18	2	A				
							L35	35	7	7
23	STRU	1	S20	20	2	IW				
			S21	21		PW				
			S21	21		A				
							L24	24	7	7
							L25	25	7	7
							L40	40	1	1
24	STRU	1	S21	21	2	(A)				
							L24	24	7	6
							L25	25	7	6
							L40	40	1	0
	PIPE	2	S19	19	2	IW				
25	ELEC	3	S18	18	2	IW				
30	STRU	1	S21	21	2	IW				
	PIPE	2	S22	22	2	PW				
	ELEC	3	S17	17	2	PW				
	PIPE	2	S22	22	2	A				
							L28	28	2	2
	ELEC	3	S17	17	2	A				
							L34	34	5	5
32	PIPE	2	S22	22	2	IW				
35	ELEC	3	S17	17	2	IW				
	STRU	1	S25	25	2	PW				
			S25	25		A				
							L39	39	4	4
39	STRU	1	S25	25	2	IW				
			T01	26		PW				
			T01	26		A				
			T01	26		IW				
			X04	31	1	A				
							L44	44	1	1
40	STRU	1	X04	31	1	IW				
			T04	32		PW				
			T04	32		A				
			T04	32		IW				

*** END OF MODEL CYCLING ***

12: APPENDIX E Human-Machine Interaction Program

12.1 Macroscopic Approach

```
*****************************************************************************
                          MODEL REPRESENTATION INPUT
*****************************************************************************
L     MAN                 1       1
L     SA                  1       1
L     U1                  1       1
L     U2                  1       1
L     U3                  1       1
L     U4                  1       1
L     U5                  1       1
W     I02   SA            0       +
W     SA01  SA            0       +
W     SA02  SA            0       +
W     SA03  SA            0       +
X     L01   SA01  SA03    -1      1       -1
X     L02   SA01  SA02    -1      1       -1
X     L03   SA01  SA01    -1      1       -1
X     L04   SA03  SA01    1       1       -1
X     L05   SA02  SA01    1       1       -1
X     L06   I02   SA01    1       0
W     I01   MAN           0       +
W     M01   MAN           1       +
W     M02   MAN           1       +
W     M03   MAN           1       +
W     M04   MAN           1       +
W     T01   MAN           2       +
X     L07   M01   M03     -1      5
X     L08   M01   M02     -1      5
X     L09   M02   M04     -1      3
X     L10   M02   M01     -1      3
X     L11   M01   T01     -1      5       -1
X     L12   M03   U106    -1      10
X     L13   M03   U206    -1      10
X     L14   M03   U306    -1      10
X     L15   M03   U406    -1      10
X     L16   M03   U506    -1      10
X     L17   M04   U501    -1      20      -1
X     L18   M04   U401    -1      20      -1
X     L19   M04   U301    -1      20      -1
X     L20   M04   U201    -1      20      -1
X     L21   M04   U101    -1      20      -1
X     L67   I01   M01     1       0
W     U101  U1            1       +
W     U201  U2            1       +
W     U301  U3            1       +
W     U401  U4            1       +
W     U501  U5            1       +
W     U102  U1            1       +
W     U202  U2            1       +
W     U302  U3            1       +
W     U402  U4            1       +
W     U502  U5            1       +
W     U103  U1            1       +
W     U203  U2            1       +
W     U303  U3            1       +
W     U403  U4            1       +
W     U503  U5            1       +
W     U104  U1            1       +
W     U204  U2            1       +
```

W	U304	U3		1	+	
W	U404	U4		1	+	
W	U504	U5		1	+	
W	U105	U1		2	+	
W	U205	U2		2	+	
W	U305	U3		2	+	
W	U405	U4		2	+	
W	U505	U5		2	+	
W	U106	U1		3	+	
W	U206	U2		3	+	
W	U306	U3		3	+	
W	U406	U4		3	+	
W	U506	U5		3	+	
W	T101	U1		1	+	
W	T201	U2		1	+	
W	T301	U3		1	+	
W	T401	U4		1	+	
W	T501	U5		1	+	
W	U107	U1		1	+	
W	U207	U2		1	+	
W	U307	U3		1	+	
W	U407	U4		1	+	
W	U507	U5		1	+	
X	L122	U101	U102	-1	10	-1
X	L222	U201	U202	-1	10	-1
X	L322	U301	U302	-1	10	-1
X	L422	U401	U402	-1	10	-1
X	L522	U501	U502	-1	10	-1
X	L123	U101	U104	-1	10	
X	L223	U201	U204	-1	10	
X	L323	U301	U304	-1	10	
X	L423	U401	U404	-1	10	
X	L523	U501	U504	-1	10	
X	L124	U101	M01	1	10	-1
X	L224	U201	M01	1	10	-1
X	L324	U301	M01	1	10	-1
X	L424	U401	M01	1	10	-1
X	L524	U501	M01	1	10	-1
X	L125	U104	U104	-1	5	-1
X	L225	U204	U204	-1	5	-1
X	L325	U304	U304	-1	5	-1
X	L425	U404	U404	-1	5	-1
X	L525	U504	U504	-1	5	-1
X	L126	U104	U105	-1	1	
X	L226	U204	U205	-1	1	
X	L326	U304	U305	-1	1	
X	L426	U404	U405	-1	1	
X	L526	U504	U505	-1	1	
X	L127	U105	T101	1	5	-1
X	L227	U205	T201	1	5	-1
X	L327	U305	T301	1	5	-1
X	L427	U405	T401	1	5	-1
X	L527	U505	T501	1	5	-1
X	L128	U103	U103	-1	10	-1
X	L228	U203	U203	-1	10	-1
X	L328	U303	U303	-1	10	-1

```
X      L428  U403  U403  -1      10      -1
X      L528  U503  U503  -1      10      -1
X      L129  U102  U103  1       60      -1
X      L229  U202  U203  1       60      -1
X      L329  U302  U303  1       60      -1
X      L429  U402  U403  1       60      -1
X      L529  U502  U503  1       60      -1
X      L130  U106  M01   1       20      -1
X      L230  U206  M01   1       20      -1
X      L330  U306  M01   1       20      -1
X      L430  U406  M01   1       20      -1
X      L530  U506  M01   1       20      -1
X      L131  U106  U107  1       20
X      L231  U206  U207  1       20
X      L331  U306  U307  1       20
X      L431  U406  U407  1       20
X      L531  U506  U507  1       20
X      L132  U103  T101  -1      1
X      L232  U203  T201  -1      1
X      L332  U303  T301  -1      1
X      L432  U403  T401  -1      1
X      L532  U503  T501  -1      1
X      L133  U107  T101  1       1       -1
X      L233  U207  T201  1       1       -1
X      L333  U307  T301  1       1       -1
X      L433  U407  T401  1       1       -1
X      L533  U507  T501  1       1       -1
X      L134  U104  T101  -1      1
X      L234  U204  T201  -1      1
X      L334  U304  T301  -1      1
X      L434  U404  T401  -1      1
X      L534  U504  T501  -1      1
./
I      I01
I      I02
./
OMORP
OSYML
OSACT
OMNTR MAN
OMNTR U1
OMNTR U2
OMNTR U3
OMNTR U4
OMNTR U5
T      2000
```

INITIAL MODEL REPRESENTATION (PAGE 1)

	SUBSYSTEMS				SYSTEM-STATES					TRANSITIONS						
LINE	USER SYMBOL	RHO	DELTA	GAMMA	USER SYMBOL	ETA	MU	ALPHA	STATUS	USER SYMBOL	KAPPA	ETA(J): ETA	LINE	BETA	TAJ	PHI
1	MAN	1	1	1												
2					I01	5	0	+	IW							
3										L67	22	6	20	1	0	0
4					T01	10	2	+	X							
5					M04	9	1	+	IW							
6										L17	17	15	141	-1	20	-1
7										L18	18	14	119	-1	20	-1
8										L19	19	13	97	-1	20	-1
9										L20	20	12	75	-1	20	-1
10										L21	21	11	53	-1	20	-1
11					M03	8	1	+	IW							
12										L12	12	36	36	-1	10	0
13										L13	13	37	58	-1	10	0
14										L14	14	38	80	-1	10	0
15										L15	15	39	102	-1	10	0
16										L16	16	40	124	-1	10	0
17					M02	7	1	+	IW							
18										L09	9	9	5	-1	3	0
19										L10	10	6	20	-1	3	0
20					M01	6	1	+	IW							
21										L07	7	8	11	-1	5	0
22										L08	8	7	17	-1	5	0
23										L11	11	10	4	-1	5	-1
24	SA	2	1	1												
25					SA03	4	0	+	IW							
26										L04	4	2	29	1	1	-1
27					SA02	3	0	+	IW							
28										L05	5	2	29	1	1	-1
29					SA01	2	0	+	IW							
30										L01	1	4	25	-1	1	-1
31										L02	2	3	27	-1	1	-1
32										L03	3	2	29	-1	1	-1
33					I02	1	0	+	IW							
34										L06	6	2	29	1	0	0
35	U1	3	1	1												
36					U106	36	3	+	IW							
37										L130	63	6	20	1	20	-1
38										L131	68	46	41	1	20	0
39					U105	31	2	+	IW							
40										L127	48	41	43	1	5	-1
41					U107	46	1	+	IW							
42										L133	78	41	43	1	1	-1
43					T101	41	1	+	X							
44					U104	26	1	+	IW							
45										L125	38	26	44	-1	5	-1
46										L126	43	31	39	-1	1	0
47										L134	83	41	43	-1	1	0
48					U103	21	1	+	IW							
49										L128	53	21	48	-1	10	-1
50										L132	73	41	43	-1	1	0
51					U102	16	1	+	IW							

INITIAL MODEL REPRESENTATION (PAGE 2)

	SUBSYSTEMS				SYSTEM-STATES					TRANSITIONS						
LINE	USER SYMBOL	RHO	DELTA	GAMMA	USER SYMBOL	ETA	MU	ALPHA	STATUS	USER SYMBOL	KAPPA	ETA(J): ETA	LINE	BETA	TAU	PHI
52										L129	58	21	48	1	60	-1
53					U101	11	1	+	IW							
54										L122	23	16	51	-1	10	-1
55										L123	28	26	44	-1	10	0
56										L124	33	6	20	1	10	-1
57	U2	4	1	1												
58					U206	37	3	+	IW							
59										L230	64	6	20	1	20	-1
60										L231	69	47	63	1	20	0
61					U205	32	2	+	IW							
62										L227	49	42	65	1	5	-1
63					U207	47	1	+	IW							
64										L233	79	42	65	1	1	-1
65					T201	42	1	+	X							
66					U204	27	1	+	IW							
67										L225	39	27	66	-1	5	-1
68										L225	44	32	61	-1	1	0
69										L234	84	42	65	-1	1	0
70					U203	22	1	+	IW							
71										L228	54	22	70	-1	10	-1
72										L232	74	42	65	-1	1	0
73					U202	17	1	+	IW							
74										L229	59	22	70	1	60	-1
75					U201	12	1	+	IW							
76										L222	24	17	73	-1	10	-1
77										L223	29	27	66	-1	10	0
78										L224	34	6	20	1	10	-1
79	U3	5	1	1												
80					U306	38	3	+	IW							
81										L330	65	6	20	1	20	-1
82										L331	70	48	85	1	20	0
83					U305	33	2	+	IW							
84										L327	50	43	87	1	5	-1
85					U307	48	1	+	IW							
86										L333	90	43	87	1	1	-1
87					T301	43	1	+	X							
88					U304	28	1	+	IW							
89										L325	40	28	88	-1	5	-1
90										L326	45	33	83	-1	1	0
91										L334	85	43	87	-1	1	0
92					U303	23	1	+	IW							
93										L328	55	23	92	-1	10	-1
94										L332	75	43	87	-1	1	0
95					U302	18	1	+	IW							
96										L329	60	23	92	1	60	-1
97					U301	13	1	+	IW							
98										L322	25	18	95	-1	10	-1
99										L323	30	28	88	-1	10	0
100										L324	35	6	20	1	10	-1
101	U4	6	1	1												
102					U406	39	3	+	IW							

INITIAL MODEL REPRESENTATION (PAGE 3)

	SUBSYSTEMS				SYSTEM-STATES					TRANSITIONS						
LINE	USER SYMBOL	RHO	DELTA	GAMMA	USER SYMBOL	ETA	MU	ALPHA	STATUS	USER SYMBOL	KAPPA	ETA(J)= ETA	LINE	BETA	TAU	PHI
103										L430	66	6	20	1	20	-1
104										L431	71	49	107	1	20	0
105					U405	34	2	+	IW							
106										L427	51	44	109	1	5	-1
107					U407	49	1	+	IW							
108										L433	81	44	109	1	1	-1
109					T401	44	1	+	X							
110					U404	29	1	+	IW							
111										L425	41	29	110	-1	5	-1
112										L426	46	34	105	-1	1	0
113										L434	86	44	109	-1	1	0
114					U403	24	1	+	IW							
115										L428	56	24	114	-1	10	-1
116										L432	76	44	109	-1	1	0
117					U402	19	1	+	IW							
118										L429	61	24	114	1	60	-1
119					U401	14	1	+	IW							
120										L422	26	19	117	-1	10	-1
121										L423	31	29	110	-1	10	0
122										L424	36	6	20	1	10	-1
123	U5	7	1	1												
124					U506	40	3	+	IW							
125										L530	67	6	20	1	20	-1
126										L531	72	50	129	1	20	0
127					U505	35	2	+	IW							
128										L527	52	45	131	1	5	-1
129					U507	50	1	+	IW							
130										L533	82	45	131	1	1	-1
131					T501	45	1	+	X							
132					U504	30	1	+	IW							
133										L525	42	30	132	-1	5	-1
134										L526	47	35	127	-1	1	0
135										L534	87	45	131	-1	1	0
136					U503	25	1	+	IW							
137										L528	57	25	135	-1	10	-1
138										L532	77	45	131	-1	1	0
139					U502	20	1	+	IW							
140										L529	62	25	136	1	60	-1
141					U501	15	1	+	IW							
142										L522	27	20	139	-1	10	-1
143										L523	32	30	132	-1	10	0
144										L524	37	6	20	1	10	-1

```
0001          SUBROUTINE BTP(88888,TTTTT,YYYYY,*)
0002          IMPLICIT INTEGER*2(T),LOGICAL*1(B)
0003          COMMON/TERM/CT
0004          INTEGER CT
0005          COMMON/LAMBDA/ LDELT(100),LQT(100)
0006          COMMON/BLK1/
             1  IT(5),IS(5),IE(5),ERATE(5),PS(5),IC,ID,INL,INI,CRATE,PM,PN,P,
             1  NSEED,I  ,SWLOAD,SWIDLE,SWFIRE
0007          LOGICAL LOAD,LAST,IDLE,FIRE
0008          LOGICAL SWLOAD,SWIDLE,SWFIRE
0009          INTEGER*2 XXXXX,YYYYY,ZZZZZ,L
0010          COMMON/CHI1/B(3000),T(1000),L(1000)
0011          ZZZZZ=YYYYY+180
0012          ZZZZZ=ZZZZZ-180
0013          GO TO (
             1        2001,2002,2003,2007,2008,2009,2010,2011,2012,2013
             1       ,2014,2015,2016,2017,2018,2019,2020,2021,2023,2024
             1       ,2025,2026,2027,2028,2029,2030,2031,2032,2038,2039
             1       ,2040,2041,2042,2043,2044,2045,2046,2047,2053,2054
             1       ,2055,2056,2057,2073,2074,2075,2076,2077,2083,2084
             1       ,2085,2086,2087,   1,   2,   3,   4,   5,  11,  17
             1       ,  18,  19,  20,  21,  23,  24,  25,  25,  27,  33
             1       ,  34,  35,  36,  37,  38,  39,  40,  41,  42,  48
             1       ,  49,  50,  51,  52,  53,  54,  55,  56,  57,  58
             1       ,  59,  60,  61,  62,  63,  64,  65,  66,  67,  73
             1       ,  79,  80,  81,  82,  82,  82,  82,  82,  82,  82
             1                                                          ),ZZZZZ
0014          RETURN 1
        C BL01
0015     2001 88888= (P.GE.PM).AND.(IC.EQ.1)
0016          GO TO 99999
        C BL02
0017     2002 88888= (P.LE.PN).AND.(IC.EQ.0)
0018          GO TO 99999
        C BL03
0019     2003 88888= .NOT.((P.GE.PM.AND.IC.EQ.1).OR.(P.LE.PN.AND.IC.EQ.0))
0020          GO TO 99999
        C BL07
0021     2007 88888= LOAD(Z)
0022          GO TO 99999
        C BL08
0023     2008 88888= SWLOAD
0024          GO TO 99999
        C BL09
0025     2009 88888= IDLE(Z)
0026          GO TO 99999
        C BL10
0027     2010 88888= SWIDLE
0028          GO TO 99999
        C BL11
0029     2011 88888= LAST(Z)
0030          GO TO 99999
        C BL12
0031     2012 88888= INL.EQ.1
0032          GO TO 99999
        C BL13
0033     2013 88888= INL.EQ.2
0034          GO TO 99999
        C BL14
0035     2014 88888= INL.EQ.3
0036          GO TO 99999
        C BL15
0037     2015 88888= INL.EQ.4
0038          GO TO 99999
        C BL16
0039     2016 88888= INL.EQ.5
0040          GO TO 99999
        C BL17
0041     2017 88888= INI.EQ.5
0042          GO TO 99999
        C BL18
0043     2018 88888= INI.EQ.4
```

```
0044            GO TO 99999
          C BL19
0045       2019 88388= INI.EQ.3
0046            GO TO 99999
          C BL20
0047       2020 88388= INI.EQ.2
0048            GO TO 99999
          C BL21
0049       2021 88388= INI.EQ.1
0050            GO TO 99999
          C BL122
0051       2023 88388= FIRE(Z)
0052            GO TO 99999
          C BL222
0053       2024 88388= FIRE(Z)
0054            GO TO 99999
          C BL322
0055       2025 88388= FIRE(Z)
0056            GO TO 99999
          C BL422
0057       2026 88388= FIRE(Z)
0058            GO TO 99999
          C BL522
0059       2027 88388= FIRE(Z)
0060            GO TO 99999
          C BL123
0061       2028 88388= SWFIRE
0062            GO TO 99999
          C BL223
0063       2029 88388= SWFIRE
0064            GO TO 99999
          C BL323
0065       2030 88388= SWFIRE
0066            GO TO 99999
          C BL423
0067       2031 88388= SWFIRE
0068            GO TO 99999
          C BL523
0069       2032 88388= SWFIRE
0070            GO TO 99999
          C BL125
0071       2038 88388= IT(1).LE.150
0072            GO TO 99999
          C BL225
0073       2039 88888= IT(2).LE.150
0074            GO TO 99999
          C BL325
0075       2040 88388= IT(3).LE.150
0076            GO TO 99999
          C BL425
0077       2041 88388= IT(4).LE.150
0078            GO TO 99999
          C BL525
0079       2042 88888= IT(5).LE.150
0080            GO TO 99999
          C BL126
0081       2043 88388= IT(1).GT.150  .AND. IT(1).NE.999
0082            GO TO 99999
          C BL226
0083       2044 88388= IT(2).GT.150  .AND. IT(2).NE.999
0084            GO TO 99999
          C BL326
0085       2045 88388= IT(3).GT.150  .AND. IT(3).NE.999
0086            GO TO 99999
          C BL426
0087       2046 88388= IT(4).GT.150  .AND. IT(4).NE.999
0088            GO TO 99999
          C BL526
0089       2047 88388= IT(5).GT.150  .AND. IT(5).NE.999
0090            GO TO 99999
          C BL123
0091       2053 88388= IS(1).EQ.3
```

```
0092              GO TO 99999
            C BL228
0093         2054 BBBBB= IS(2).EQ.3
0094              GO TO 99999
            C BL328
0095         2055 BBBBB= IS(3).EQ.3
0096              GO TO 99999
            C BL428
0097         2056 BBBBB= IS(4).EQ.3
0098              GO TO 99999
            C BL528
0099         2057 BBBBB= IS(5).EQ.3
0100              GO TO 99999
            C BL132
0101         2073 BBBBB= IS(1).EQ.4
0102              GO TO 99999
            C BL232
0103         2074 BBBBB= IS(2).EQ.4
0104              GO TO 99999
            C BL332
0105         2075 BBBBB= IS(3).EQ.4
0106              GO TO 99999
            C BL432
0107         2076 BBBBB= IS(4).EQ.4
0108              GO TO 99999
            C BL532
0109         2077 BBBBB= IS(5).EQ.4
0110              GO TO 99999
            C BL134
0111         2083 BBBBB= IT(1).EQ.999
0112              GO TO 99999
            C BL234
0113         2084 BBBBB= IT(2).EQ.999
0114              GO TO 99999
            C BL334
0115         2085 BBBBB= IT(3).EQ.999
0116              GO TO 99999
            C BL434
0117         2086 BBBBB= IT(4).EQ.999
0118              GO TO 99999
            C BL534
0119         2087 BBBBB= IT(5).EQ.999
0120              GO TO 99999
            C L01
0121            1 CONTINUE
0122         6001 P=P + CRATE*IC -(IE(1)*ERATE(1) + IE(2)*ERATE(2) + IE(3)*ERATE(3):
                1                 + IE(4)*ERATE(4) + IE(5)*ERATE(5))
0123         7001 FORMAT(' ',F6.2,2I2,15I5,I10)
0124              GO TO 99999
            C L02
0125            2 GO TO 6001
0126         8001 CONTINUE
0127              GO TO 99999
            C L03
0128            3 GO TO 6001
0129         8002 CONTINUE
0130              GO TO 99999
            C L04
0131            4 CONTINUE
0132              IC=0
0133              GO TO 6001
0134         8003 CONTINUE
0135              GO TO 99999
            C L05
0136            5 CONTINUE
0137              IC=1
0138              GO TO 6001
0139         8004 CONTINUE
0140              GO TO 99999
            C L11
0141           11 CONTINUE
0142              CT=LQT(1)
0143              GO TO 99999
            C L17
0144           17 CONTINUE
0145         6002 IS(5)=1
0146              IE(5)=1
0147              WRITE(6,7001)P,INL,INI,IT,IS,IE,IC
```

```
0148              GO TO 99999
            C L18
0149           18 CONTINUE
0150         6003 IS(4)=1
0151              IE(4)=1
0152              WRITE(6,7001)P,INL,INI,IT,IS,IE,IC
0153              GO TO 99999
            C L19
0154           19 CONTINUE
0155         6004 IS(3)=1
0156              IE(3)=1
0157              WRITE(6,7001)P,INL,INI,IT,IS,IE,IC
0158              GO TO 99999
            C L20
0159           20 CONTINUE
0160         6005 IS(2)=1
0161              IE(2)=1
0162              WRITE(6,7001)P,INL,INI,IT,IS,IE,IC
0163              GO TO 99999
            C L21
0164           21 CONTINUE
0165         6006 IS(1)=1
0166              IE(1)=1
0167              WRITE(6,7001)P,INL,INI,IT,IS,IE,IC
0168              GO TO 99999
            C L122
0169           23 CONTINUE
0170         6007 IS(1)=2
0171              WRITE(6,7001)P,INL,INI,IT,IS,IE,IC
0172              GO TO 99999
            C L124
0173           33 CONTINUE
0174         6008 IE(1)=0
0175              WRITE(6,7001)P,INL,INI,IT,IS,IE,IC
0176              GO TO 99999
            C L128
0177           53 CONTINUE
0178         6009 IS(1)=3
0179              WRITE(6,7001)P,INL,INI,IT,IS,IE,IC
0180              GO TO 99999
            C L130
0181           63 CONTINUE
0182         6010 IS(1)=4
0183              WRITE(6,7001)P,INL,INI,IT,IS,IE,IC
0184              GO TO 99999
            C L222
0185           24 IS(2)=2
0186              WRITE(6,7001)P,INL,INI,IT,IS,IE,IC
0187              GO TO 99999
            C L224
0188           34 IE(2)=0
0189              WRITE(6,7001)P,INL,INI,IT,IS,IE,IC
0190              GO TO 99999
            C L228
0191           54 IS(2)=3
0192              WRITE(6,7001)P,INL,INI,IT,IS,IE,IC
0193              GO TO 99999
            C L230
0194           64 IS(2)=4
0195              WRITE(6,7001)P,INL,INI,IT,IS,IE,IC
0196              GO TO 99999
            C L322
0197           25 IS(3)=2
0198              WRITE(6,7001)P,INL,INI,IT,IS,IE,IC
0199              GO TO 99999
            C L324
0200           35 IE(3)=0
0201              WRITE(6,7001)P,INL,INI,IT,IS,IE,IC
0202              GO TO 99999
            C L328
0203           55 IS(3)=3
0204              WRITE(6,7001)P,INL,INI,IT,IS,IE,IC
0205              GO TO 99999
            C L330
0206           65 IS(3)=4
```

```
0207            WRITE(6,7001)P,INL,INI,IT,IS,IE,IC
0208            GO TO 99999
          C L422
0209         26 IS(4)=2
0210            WRITE(6,7001)P,INL,INI,IT,IS,IE,IC
0211            GO TO 99999
          C L424
0212         36 IE(4)=0
0213            WRITE(6,7001)P,INL,INI,IT,IS,IE,IC
0214            GO TO 99999
          C L428
0215         55 IS(4)=3
0216            WRITE(6,7001)P,INL,INI,IT,IS,IE,IC
0217            GO TO 99999
          C L430
0218         66 IS(4)=4
0219            WRITE(6,7001)P,INL,INI,IT,IS,IE,IC
0220            GO TO 99999
          C L522
0221         27 IS(5)=2
0222            WRITE(6,7001)P,INL,INI,IT,IS,IE,IC
0223            GO TO 99999
          C L524
0224         37 IE(5)=0
0225            WRITE(6,7001)P,INL,INI,IT,IS,IE,IC
0226            GO TO 99999
          C L528
0227         57 IS(5)=3
0228            WRITE(6,7001)P,INL,INI,IT,IS,IE,IC
0229            GO TO 99999
          C L530
0230         67 IS(5)=4
0231            WRITE(6,7001)P,INL,INI,IT,IS,IE,IC
0232            GO TO 99999
          C L125
0233         38 IT(1)=IT(1)+5
0234            WRITE(6,7001)P,INL,INI,IT,IS,IE,IC
0235            GO TO 99999
          C L225
0236         39 IT(2)=IT(2)+5
0237            WRITE(6,7001)P,INL,INI,IT,IS,IE,IC
0238            GO TO 99999
          C L325
0239         40 IT(3)=IT(3)+5
0240            WRITE(6,7001)P,INL,INI,IT,IS,IE,IC
0241            GO TO 99999
          C L425
0242         41 IT(4)=IT(4)+5
0243            WRITE(6,7001)P,INL,INI,IT,IS,IE,IC
0244            GO TO 99999
          C L525
0245         42 IT(5)=IT(5)+5
0246            WRITE(6,7001)P,INL,INI,IT,IS,IE,IC
0247            GO TO 99999
          C L133
0248         78 IT(1)=999
0249            WRITE(6,7001)P,INL,INI,IT,IS,IE,IC
0250            GO TO 99999
          C L233
0251         79 IT(2)=999
0252            WRITE(6,7001)P,INL,INI,IT,IS,IE,IC
0253            GO TO 99999
          C L333
0254         80 IT(3)=999
0255            WRITE(6,7001)P,INL,INI,IT,IS,IE,IC
0256            GO TO 99999
          C L433
0257         81 IT(4)=999
0258            WRITE(6,7001)P,INL,INI,IT,IS,IE,IC
0259            GO TO 99999
          C L533
0260         82 IT(5)=999
0261            WRITE(6,7001)P,INL,INI,IT,IS,IE,IC
0262            GO TO 99999
          C L127
0263         43 IS(1)=6
0264            WRITE(6,7001)P,INL,INI,IT,IS,IE,IC
```

```
0265          GO TO 99999
        C L227
0266       49 IS(2)=6
0267          WRITE(6,7001)P,INL,INI,IT,IS,IE,IC
0268          GO TO 99999
        C L327
0269       50 IS(3)=6
0270          WRITE(6,7001)P,INL,INI,IT,IS,IE,IC
0271          GO TO 99999
        C L427
0272       51 IS(4)=6
0273          WRITE(6,7001)P,INL,INI,IT,IS,IE,IC
0274          GO TO 99999
        C L527
0275       52 IS(5)=6
0276          WRITE(6,7001)P,INL,INI,IT,IS,IE,IC
0277          GO TO 99999
        C L129
0278       58 IS(1)=3
0279          WRITE(6,7001)P,INL,INI,IT,IS,IE,IC
0280          GO TO 99999
        C L229
0281       59 IS(2)=3
0282          WRITE(6,7001)P,INL,INI,IT,IS,IE,IC
0283          GO TO 99999
        C L329
0284       60 IS(3)=3
0285          WRITE(6,7001)P,INL,INI,IT,IS,IE,IC
0286          GO TO 99999
        C L429
0287       61 IS(4)=3
0288          WRITE(6,7001)P,INL,INI,IT,IS,IE,IC
0289          GO TO 99999
        C L529
0290       62 IS(5)=3
0291          WRITE(6,7001)P,INL,INI,IT,IS,IE,IC
0292    99999 RETURN
0293          END
```

```
0001          BLOCK DATA
0002          COMMON/BLK1/
             1 IT(5),IS(5),IE(5),ERATE(5),PS(5),IC,IO,INL,INI,CRATE,PM,PN,P,
             1 NSEED,I  ,SWLOAD,SWIDLE,SWFIRE
0003          DATA
             1 IT/5*0/,IS/5*0/,IE/5*0/,ERATE/10.,4*5.0/,PS/5*220./,IC/0/,
             1 IO/1/,INL/1/,INI/1/,CRATE/1.00/,PM/250./,PN/200./,NSEED/65549/
0004          DATA P/250./
0005          END
```

```
0001          LOGICAL FUNCTION FIRE(X)
0002          COMMON/BLK1/
             1 IT(5),IS(5),IE(5),ERATE(5),PS(5),IC,IO,INL,INI,CRATE,PM,PN,P,
             1 NSEED,I  ,SWLOAD,SWIDLE,SWFIRE
0003          LOGICAL SWLOAD,SWIDLE,SWFIRE
0004          LOGICAL*1 SW
0005          SW=.TRUE.
0006          SWFIRE=SW
0007          FIRE=SW
0008          RETURN
0009          END
```

```
0001          LOGICAL FUNCTION LAST(X)
0002          COMMON/BLK1/
             1  IT(5),IS(5),IE(5),ERATE(5),PS(5),IC,ID,INL,INI,CRATE,PM,PN,P,
             1  NSEED,I  ,SWLOAD,SWIDLE,SWFIRE
0003          LOGICAL SWLOAD,SWIDLE,SWFIRE
0004          LOGICAL*1 SW
0005          DO 1 J=1,5
0006          IF((IS(J).EQ.4).OR.(IS(J).EQ.5)) GO TO 1
0007          GO TO 2
0008        1 CONTINUE
0009          SW=.TRUE.
0010          GO TO 3
0011        2 SW=.FALSE.
0012        3 LAST=SW
0013          RETURN
0014          END
```

```
0001          LOGICAL FUNCTION LOAD(X)
0002          COMMON/BLK1/
             1  IT(5),IS(5),IE(5),ERATE(5),PS(5),IC,ID,INL,INI,CRATE,PM,PN,P,
             1  NSEED,I  ,SWLOAD,SWIDLE,SWFIRE
0003          LOGICAL SWLOAD,SWIDLE,SWFIRE
0004          LOGICAL*1 SW
0005          DO 1 J=1,5
0006          IF(IS(J).EQ.3)GO TO 2
0007        1 CONTINUE
0008          SW=.FALSE.
0009          SWLOAD=.TRUE.
0010          GO TO 3
0011        2 INL= J
0012          SW=.TRUE.
0013          SWLOAD=.FALSE.
0014        3 LOAD=SW
0015          RETURN
0016          END
```

```
0001          LOGICAL FUNCTION IDLE(X)
0002          COMMON/BLK1/
             1  IT(5),IS(5),IE(5),ERATE(5),PS(5),IC,ID,INL,INI,CRATE,PM,PN,P, -
             1  NSEED,I  ,SWLOAD,SWIDLE,SWFIRE
0003          LOGICAL SWLOAD,SWIDLE,SWFIRE
0004          LOGICAL*1 SW
0005          DO 1 J=1,5
0006          IF((IS(J).EQ.0).AND.(P.GE.PS(J))) GO TO 2
0007        1 CONTINUE
0008          DO 3 J=1,5
0009          IF((IS(J).EQ.1).AND.(P.GE.PS(J))) GO TO 2
0010        3 CONTINUE
0011          SWIDLE=.TRUE.
0012          SW=.FALSE.
0013          GO TO 4
0014        2 SW=.TRUE.
0015          SWIDLE=.FALSE.
0016          INI=J
0017        4 IDLE= SW
0018          RETURN
0019          END
```

SYMBOL LISTS

RHO	L-NAME	RHO	L-NAME	RHO	L-NAME	RHO	L-NAME
1	MAN	3	U1	5	U3	7	U5
2	SA	4	U2	6	U4		

ETA	W-NAME	ETA	W-NAME	ETA	W-NAME	ETA	W-NAME
1	I02	14	U401	27	U204	39	U406
2	SA01	15	U501	28	U304	40	U506
3	SA02	16	U102	29	U404	41	T101
4	SA03	17	U202	30	U504	42	T201
5	I01	18	U302	31	U105	43	T301
6	M01	19	U402	32	U205	44	T401
7	M02	20	U502	33	U305	45	T501
8	M03	21	U103	34	U405	46	U107
9	M04	22	U203	35	U505	47	U207
10	T01	23	U303	36	U106	48	U307
11	U101	24	U403	37	U206	49	U407
12	U201	25	U503	38	U306	50	U507
13	U301	26	U104				

KAPPA	X-NAME	KAPPA	X-NAME	KAPPA	X-NAME	KAPPA	X-NAME
1	L01	23	L122	45	L326	67	L530
2	L02	24	L222	46	L426	68	L131
3	L03	25	L322	47	L526	69	L231
4	L04	26	L422	48	L127	70	L331
5	L05	27	L522	49	L227	71	L431
6	L06	28	L123	50	L327	72	L531
7	L07	29	L223	51	L427	73	L132
8	L08	30	L323	52	L527	74	L232
9	L09	31	L423	53	L128	75	L332
10	L10	32	L523	54	L228	76	L432
11	L11	33	L124	55	L328	77	L532
12	L12	34	L224	56	L428	78	L133
13	L13	35	L324	57	L528	79	L233
14	L14	36	L424	58	L129	80	L333
15	L15	37	L524	59	L229	81	L433
16	L16	38	L125	60	L329	82	L533
17	L17	39	L225	61	L429	83	L134
18	L18	40	L325	62	L529	84	L234
19	L19	41	L425	63	L130	85	L334
20	L20	42	L525	64	L230	86	L434
21	L21	43	L126	65	L330	87	L534
22	L67	44	L226	66	L430		

250.00	1	1	0	0	0	0	0	1	0	0	0	0	1	0	0	0	0	-	0
145.00	1	1	0	0	0	0	0	2	0	0	0	0	1	0	0	0	0		1
145.00	1	1	0	0	0	0	0	2	0	0	0	0	0	0	0	0	0		1
150.00	1	1	5	0	0	0	0	2	0	0	0	0	0	0	0	0	0		1
155.00	1	1	10	0	0	0	0	2	0	0	0	0	0	0	0	0	0		1
160.00	1	1	15	0	0	0	0	2	0	0	0	0	0	0	0	0	0		1

165.00	1	1	20	0	0	0	0	2	0	0	0	0	0	0	0	0	0	1
170.00	1	1	25	0	0	0	0	2	0	0	0	0	0	0	0	0	0	1
175.00	1	1	30	0	0	0	0	2	0	0	0	0	0	0	0	0	0	1
180.00	1	1	35	0	0	0	0	2	0	0	0	0	0	0	0	0	0	1
185.00	1	1	40	0	0	0	0	2	0	0	0	0	0	0	0	0	0	1
190.00	1	1	45	0	0	0	0	2	0	0	0	0	0	0	0	0	0	1
195.00	1	1	50	0	0	0	0	2	0	0	0	0	0	0	0	0	0	1
200.00	1	1	55	0	0	0	0	2	0	0	0	0	0	0	0	0	0	1
205.00	1	1	60	0	0	0	0	2	0	0	0	0	0	0	0	0	0	1
205.00	1	1	60	0	0	0	0	3	0	0	0	0	0	0	0	0	0	1
210.00	1	1	65	0	0	0	0	3	0	0	0	0	0	0	0	0	0	1
215.00	1	1	70	0	0	0	0	3	0	0	0	0	0	0	0	0	0	1
215.00	1	1	70	0	0	0	0	3	0	0	0	0	0	0	0	0	0	1
220.00	1	1	75	0	0	0	0	3	0	0	0	0	0	0	0	0	0	1
244.00	1	1	75	0	0	0	0	4	0	0	0	0	0	0	0	0	0	1
245.00	1	1	999	0	0	0	0	4	0	0	0	0	0	0	0	0	0	1
251.00	1	2	999	0	0	0	0	4	1	0	0	0	0	1	0	0	0	0
196.00	1	2	999	0	0	0	0	4	2	0	0	0	0	1	0	0	0	0
198.00	1	2	999	0	0	0	0	4	2	0	0	0	0	0	0	0	0	0
200.00	1	2	999	5	0	0	0	4	2	0	0	0	0	0	0	0	0	1
205.00	1	2	999	10	0	0	0	4	2	0	0	0	0	0	0	0	0	1
210.00	1	2	999	15	0	0	0	4	2	0	0	0	0	0	0	0	0	1
215.00	1	2	999	20	0	0	0	4	2	0	0	0	0	0	0	0	0	1
220.00	1	2	999	25	0	0	0	4	2	0	0	0	0	0	0	0	0	1
225.00	1	3	999	30	0	0	0	4	2	0	0	0	0	0	0	0	0	1
230.00	1	3	999	35	0	0	0	4	2	0	0	0	0	0	0	0	0	1
235.00	1	3	999	40	0	0	0	4	2	0	0	0	0	0	0	0	0	1
240.00	1	3	999	45	0	0	0	4	2	0	0	0	0	0	0	0	0	1
245.00	1	3	999	50	0	0	0	4	2	0	0	0	0	0	0	0	0	1
246.00	1	3	999	50	0	0	0	4	2	1	0	0	0	0	1	0	0	1
230.00	1	3	999	55	0	0	0	4	2	1	0	0	0	0	1	0	0	1
210.00	1	3	999	60	0	0	0	4	2	1	0	0	0	0	1	0	0	1
210.00	1	3	999	60	0	0	0	4	3	1	0	0	0	0	1	0	0	1
202.00	1	3	999	60	0	0	0	4	3	2	0	0	0	0	1	0	0	1
202.00	1	3	999	60	0	0	0	4	3	2	0	0	0	0	0	0	0	1
205.00	2	3	999	65	0	0	0	4	3	2	0	0	0	0	0	0	0	1
207.00	2	3	999	65	5	0	0	4	3	2	0	0	0	0	0	0	0	1
210.00	2	3	999	70	5	0	0	4	3	2	0	0	0	0	0	0	0	1
210.00	2	3	999	70	5	0	0	4	3	2	0	0	0	0	0	0	0	1
212.00	2	3	999	70	10	0	0	4	3	2	0	0	0	0	0	0	0	1
215.00	2	3	999	75	10	0	0	4	3	2	0	0	0	0	0	0	0	1
217.00	2	3	999	75	15	0	0	4	3	2	0	0	0	0	0	0	0	1
222.00	2	3	999	75	20	0	0	4	3	2	0	0	0	0	0	0	0	1
227.00	2	3	999	75	25	0	0	4	3	2	0	0	0	0	0	0	0	1
232.00	2	3	999	75	30	0	0	4	3	2	0	0	0	0	0	0	0	1
237.00	2	3	999	75	30	0	0	4	4	2	0	0	0	0	0	0	0	1
237.00	2	3	999	75	35	0	0	4	4	2	0	0	0	0	0	0	0	1
238.00	2	3	999	999	35	0	0	4	4	2	0	0	0	0	0	0	0	1
242.00	2	3	999	999	40	0	0	4	4	2	0	0	0	0	0	0	0	1
247.00	2	4	999	999	45	0	0	4	4	2	0	0	0	0	0	0	0	1
251.00	2	4	999	999	50	0	0	4	4	2	0	0	0	0	0	0	0	0
251.00	2	4	999	999	55	0	0	4	4	2	0	0	0	0	0	0	0	0
251.00	2	4	999	999	60	0	0	4	4	2	0	0	0	0	0	0	0	0
251.00	2	4	999	999	60	0	0	4	4	3	0	0	0	0	0	0	0	0
251.00	2	4	999	999	60	0	0	4	4	3	1	0	0	0	0	1	0	0
236.00	2	4	999	999	65	0	0	4	4	3	1	0	0	0	0	1	0	0
211.00	2	4	999	999	70	0	0	4	4	3	1	0	0	0	0	1	0	0
211.00	2	4	999	999	70	0	0	4	4	3	1	0	0	0	0	1	0	0
196.00	2	4	999	999	70	0	0	4	4	3	2	0	0	0	0	1	0	0
196.00	2	4	999	999	70	0	0	4	4	3	2	0	0	0	0	0	0	0
197.00	3	4	999	999	75	0	0	4	4	3	2	0	0	0	0	0	0	1
200.00	3	4	999	999	75	5	0	4	4	3	2	0	0	0	0	0	0	1
202.00	3	4	999	999	80	5	0	4	4	3	2	0	0	0	0	0	0	1
202.00	3	4	999	999	80	5	0	4	4	3	2	0	0	0	0	0	0	1
205.00	3	4	999	999	80	10	0	4	4	3	2	0	0	0	0	0	0	1
207.00	3	4	999	999	85	10	0	4	4	3	2	0	0	0	0	0	0	1

210.00	3	4	999	999	85	15	0	4	4	3	2	0	0	0	0	0	0	1
215.00	3	4	999	999	85	20	0	4	4	3	2	0	0	0	0	0	0	1
220.00	3	4	999	999	85	25	0	4	4	3	2	0	0	0	0	0	0	1
225.00	3	4	999	999	85	30	0	4	4	3	2	0	0	0	0	0	0	1
220.00	3	4	999	999	85	30	0	4	4	4	2	0	0	0	0	0	0	1
230.00	3	4	999	999	85	35	0	4	4	4	2	0	0	0	0	0	0	1
231.00	3	4	999	999	999	35	0	4	4	4	2	0	0	0	0	0	0	1
235.00	3	4	999	999	999	40	0	4	4	4	2	0	0	0	0	0	0	1
240.00	3	5	999	999	999	45	0	4	4	4	2	0	0	0	0	0	0	1
245.00	3	5	999	999	999	50	0	4	4	4	2	0	0	0	0	0	0	1
250.00	3	5	999	999	999	55	0	4	4	4	2	0	0	0	0	0	0	1
251.00	3	5	999	999	999	60	0	4	4	4	2	0	0	0	0	0	0	0
251.00	3	5	999	999	999	60	0	4	4	4	3	0	0	0	0	0	0	0
251.00	3	5	999	999	999	60	0	4	4	4	3	1	0	0	0	0	1	0
236.00	3	5	999	999	999	65	0	4	4	4	3	1	0	0	0	0	1	0
211.00	3	5	999	999	999	70	0	4	4	4	3	1	0	0	0	0	1	0
211.00	3	5	999	995	999	70	0	4	4	4	3	1	0	0	0	0	1	0
196.00	3	5	999	999	999	70	0	4	4	4	3	2	0	0	0	0	1	0
196.00	3	5	999	999	999	70	0	4	4	4	3	2	0	0	0	0	0	0
197.00	4	5	999	999	999	75	0	4	4	4	3	2	0	0	0	0	0	1
200.00	4	5	999	999	999	75	5	4	4	4	3	2	0	0	0	0	0	1
202.00	4	5	999	999	999	80	5	4	4	4	3	2	0	0	0	0	0	1
202.00	4	5	999	999	999	80	5	4	4	4	3	2	0	0	0	0	0	1
205.00	4	5	999	999	999	80	10	4	4	4	3	2	0	0	0	0	0	1
207.00	4	5	999	999	999	85	10	4	4	4	3	2	0	0	0	0	0	1
210.00	4	5	999	999	999	85	15	4	4	4	3	2	0	0	0	0	0	1
215.00	4	5	999	999	999	85	20	4	4	4	3	2	0	0	0	0	0	1
220.00	4	5	999	999	999	85	25	4	4	4	3	2	0	0	0	0	0	1
225.00	4	5	999	999	999	85	30	4	4	4	3	2	0	0	0	0	0	1
230.00	4	5	999	999	999	85	30	4	4	4	4	2	0	0	0	0	0	1
230.00	4	5	999	999	999	85	35	4	4	4	4	2	0	0	0	0	0	1
231.00	4	5	999	999	999	999	35	4	4	4	4	2	0	0	0	0	0	1
235.00	4	5	999	999	999	999	40	4	4	4	4	2	0	0	0	0	0	1
240.00	4	5	999	999	999	999	45	4	4	4	4	2	0	0	0	0	0	1
245.00	4	5	999	999	999	999	50	4	4	4	4	2	0	0	0	0	0	1
250.00	4	5	999	999	999	999	55	4	4	4	4	2	0	0	0	0	0	1
251.00	4	5	999	999	999	999	60	4	4	4	4	2	0	0	0	0	0	0
251.00	4	5	999	999	999	999	60	4	4	4	4	3	0	0	0	0	0	0
251.00	4	5	999	999	999	999	65	4	4	4	4	3	0	0	0	0	0	0
251.00	5	5	999	999	999	999	70	4	4	4	4	3	0	0	0	0	0	0
251.00	5	5	999	999	999	999	70	4	4	4	4	3	0	0	0	0	0	0
251.00	5	5	999	999	999	999	75	4	4	4	4	3	0	0	0	0	0	0
251.00	5	5	999	999	999	999	80	4	4	4	4	3	0	0	0	0	0	0
251.00	5	5	999	999	999	999	80	4	4	4	4	3	0	0	0	0	0	0
251.00	5	5	999	999	999	999	80	4	4	4	4	4	0	0	0	0	0	0
251.00	5	5	999	999	999	999	999	4	4	4	4	4	0	0	0	0	0	0

12.2 Microscopic Approach

```
*****************************************************************************
                          MODEL REPRESENTATION INPUT
*****************************************************************************
L     MAN                 1       1
L     U1                  1       1
L     SA                  1       1
W     SA01, SA            1       +
W     SA02  SA            1       +
W     SA03  SA            1       +
W     I02   SA            0       +
X     L42   I02   SA01    1       0
X     L43   SA01  SA03    -1      1       -1
X     L44   SA01  SA02    -1      1       -1
X     L45   SA01  SA01    -1      1       -1
X     L46   SA03  SA01    1       1       -1
X     L47   SA02  SA01    1       1       -1
W     M01   MAN           2       +
W     M02   MAN           2       +
W     M03   MAN           2       +
W     M04   MAN           2       +
W     M05   MAN           2       +
W     M06   MAN           2       +
W     M07   MAN           2       +
W     M08   MAN           2       +
W     M09   MAN           2       +
W     M10   MAN           2       +
W     M11   MAN           2       +
W     M12   MAN           2       +
W     M13   MAN           2       +
W     M14   MAN           2       .
W     M15   MAN           2       +
W     T01   MAN           2       +
W     T02   MAN           2       +
W     X01   MAN           1       +
W     X03   MAN           1       .
W     I01   MAN           0       +
X     L01   I01   M01     1       0       -1
X     L02   M01   M03     -1      1       -1
X     L03   M01   M02     -1      1       -1
X     L04   M02   M01     1       -1      -1
X     L05   M03   U01     1       1       -1
X     L06   M03   M04     1       1       -1
X     L07   M04   U03     1       2       -1
X     L08   M04   M05     1       2       -1
X     L09   M05   M05     -1      1       -1
X     L10   M05   M06     -1      1       -1
X     L11   M05   M08     -1      1       -1
X     L12   M08   M09     1       2       -1
X     L13   M09   T02     1       1       -1
X     L14   M10   M08     1       3       -1
X     L15   M06   M07     1       3       -1
X     L16   M06   U05     1       3       -1
X     L17   M07   M11     -1      5       -1
X     L18   M07   M10     -1      5       -1
X     L19   M11   M12     1       2       -1
X     L20   M12   M13     1       5       -1
X     L21   M12   U07     1       5       -1
X     L22   M13   M15     1       -1      -1
X     L23   M14   T01     1       1       -1
```

```
X     L24   M14   U10   1     1     -1
W     U01   U1          2     +
W     U02   U1          2     +
W     U03   U1          2     +
W     U04   U1          2     +
W     U05   U1          2     +
W     U06   U1          2     +
W     U07   U1          2     +
W     U08   U1          2     +
W     U09   U1          2     +
W     U10   U1          2     +
W     U11   U1          2     .
W     T03   U1          2     +
W     T04   U1          2     +
W     T05   U1          2     +
W     T06   U1          2     +
W     X02   U1          1     .
X     L25   U01   U01   -1    1
X     L26   U01   U02   -1    1     -1
X     L27   U03   U03   -1    1
X     L28   U03   U04   -1    1     -1
X     L29   U05   U05   -1    1
X     L30   U05   U06   -1    1     -1
X     L31   U07   U08   1     -1    -1
X     L32   U07   M14   1     -1    -1
X     L33   U08   U08   -1    1     -1
X     L34   U08   U09   -1    1     -1
X     L35   U08   U11   -1    1     -1
X     L36   U10   U11   1     1     -1
X     L37   U11   T06   1     1     -1
X     L38   M15   M14   -1    1
X     L39   M15   X01   -1    1     -1
X     L40   U02   T03   1     1     -1
X     L41   U06   T05   1     1     -1
X     L43   U04   T04   1     1     -1
X     L50   T01   X01   1     1     -1
X     L51   T02   X01   1     1
X     L53   T03   X02   1     1
X     L54   X01   X03   1     1
X     L55   X02   X03   1     1
X     L56   X03   M01   1     1     -1
./
I     I01
I     I02
./
OMDRP
OSYML
T     2000
```

INITIAL MODEL REPRESENTATION (PAGE 1)

	SUBSYSTEMS				SYSTEM-STATES					TRANSITIONS						
LINE	USER SYMBOL	RHO	DELTA	GAMMA	USER SYMBOL	ETA	MU	ALPHA	STATUS	USER SYMBOL	KAPPA	ETA(J)= ETA	LINE	BETA	TAU	PHI
1	MAN	1	1	1												
2					I01	24	0	+	IW							
3										L01	7	5	45	1	0	-1
4					T02	21	2	+	IW							
5										L51	50	22	50	1	1	0
6					T01	20	2	+	IW							
7										L50	49	22	50	1	1	-1
8					M15	19	2	+	IW							
9										L38	44	18	11	-1	1	0
10										L39	45	22	50	-1	1	-1
11					M14	18	2	.	IW							
12										L23	29	20	5	1	1	-1
13										L24	30	34	60	1	1	-1
14					M13	17	2	+	IW							
15										L22	28	19	8	1	-1	-1
16					M12	16	2	+	IW							
17										L20	26	17	14	1	5	-1
18										L21	27	31	67	1	5	-1
19					M11	15	2	+	IW							
20										L19	25	16	16	1	2	-1
21					M10	14	2	+	IW							
22										L14	20	12	25	1	3	-1
23					M09	13	2	+	IW							
24										L13	19	21	4	1	1	-1
25					M08	12	2	+	IW							
26										L12	18	13	23	1	2	-1
27					M07	11	2	+	IW							
28										L17	23	15	19	-1	5	-1
29										L18	24	14	21	-1	5	-1
30					M06	10	2	+	IW							
31										L15	21	11	27	1	3	-1
32										L16	22	29	72	1	3	-1
33					M05	9	2	+	IW							
34										L09	15	9	33	-1	1	-1
35										L10	15	10	30	-1	1	-1
36										L11	17	12	25	-1	1	-1
37					M04	8	2	+	IW							
38										L07	13	27	77	1	2	-1
39										L08	14	9	33	1	2	-1
40					M03	7	2	+	IW							
41										L05	11	25	82	1	1	-1
42										L06	12	8	37	1	1	-1
43					M02	6	2	+	IW							
44										L04	10	5	45	1	-1	-1
45					M01	5	2	+	IW							
46										L02	8	7	40	-1	1	-1
47										L03	9	6	43	-1	1	-1
48					X03	23	1	.	IW							
49										L56	54	5	45	1	1	-1
50					X01	22	1	+	IW							
51										L54	52	23	48	1	1	0

INITIAL MODEL REPRESENTATION (PAGE 2)

	SUBSYSTEMS				SYSTEM-STATES					TRANSITIONS						
LINE	USER SYMBOL	RHO	DELTA	GAMMA	USER SYMBOL	ETA	MU	ALPHA	STATUS	USER SYMBOL	KAPPA	ETA(J)= ETA	LINE	BETA	TAU	PHI
52	U1	2	1	1												
53					T06	39	2	+	X							
54					T05	38	2	+	X							
55					T04	37	2	+	X							
56					T03	36	2	+	IW							
57										L53	51	40	85	1	1	0
58					U11	35	2	.	IW							
59										L37	43	39	53	1	1	-1
60					U10	34	2	+	IW							
61										L36	42	35	58	1	1	-1
62					U09	33	2	+	X							
63					U08	32	2	+	IW							
64										L33	39	32	63	-1	1	-1
65										L34	40	33	62	-1	1	-1
66										L35	41	35	53	-1	1	-1
67					U07	31	2	+	IW							
68										L31	37	32	53	1	-1	-1
69										L32	38	18	11	1	-1	-1
70					U06	30	2	+	IW							
71										L51	47	38	54	1	1	-1
72					U05	29	2	+	IW							
73										L29	35	29	72	-1	1	0
74										L30	36	30	70	-1	1	-1
75					U04	28	2	+	IW							
76										L48	43	37	55	1	1	-1
77					U03	27	2	+	IW							
78										L27	33	27	77	-1	1	0
79										L28	34	28	75	-1	1	-1
80					U02	26	2	+	IW							
81										L40	45	35	55	1	1	-1
82					U01	25	2	+	IW							
83										L25	31	25	82	-1	1	0
84										L26	32	25	80	-1	1	-1
85					X02	40	1	.	IW							
86										L55	53	23	43	1	1	0
87	SA	3	1	1												
88					I02	4	0	+	IW							
89										L42	1	1	94	1	0	0
90					SA03	3	1	+	IW							
91										L46	5	1	94	1	1	-1
92					SA02	2	1	+	IW							
93										L47	6	1	94	1	1	-1
94					SA01	1	1	+	IW							
95										L43	2	3	90	-1	1	-1
96										L44	3	2	92	-1	1	-1
97										L45	4	1	94	-1	1	-1

SYMBOL LISTS

RHO	L-NAME	RHO	L-NAME	RHO	L-NAME	RHO	L-NAME
1	MAN	2	U1	3	SA		

ETA	W-NAME	ETA	W-NAME	ETA	W-NAME	ETA	W-NAME
1	SA01	11	M07	21	T02	31	U07
2	SA02	12	M08	22	X01	32	U08
3	SA03	13	M09	23	X03	33	U09
4	I02	14	M10	24	I01	34	U10
5	M01	15	M11	25	U01	35	U11
6	M02	16	M12	26	U02	36	T03
7	M03	17	M13	27	U03	37	T04
8	M04	18	M14	28	U04	38	T05
9	M05	19	M15	29	U05	39	T06
10	M06	20	T01	30	U06	40	X02

KAPPA	X-NAME	KAPPA	X-NAME	KAPPA	X-NAME	KAPPA	X-NAME
1	L42	15	L09	29	L23	42	L36
2	L43	16	L10	30	L24	43	L37
3	L44	17	L11	31	L25	44	L38
4	L45	18	L12	32	L26	45	L39
5	L46	19	L13	33	L27	46	L40
6	L47	20	L14	34	L28	47	L41
7	L01	21	L15	35	L29	48	L42
8	L02	22	L16	36	L30	49	L50
9	L03	23	L17	37	L31	50	L51
10	L04	24	L18	38	L32	51	L52
11	L05	25	L19	39	L33	52	L54
12	L06	26	L20	40	L34	53	L55
13	L07	27	L21	41	L35	54	L56
14	L08	28	L22				

```
0001          SUBROUTINE BTP(88888,TTTTT,YYYYY,*)
0002          IMPLICIT INTEGER*2(T),LOGICAL*1(B)
0003          COMMON/TERM/CT
0004          COMMON/LAMBDA/LDELT(100),LQT(100) ,
0005          INTEGER P,PS,PN,PM
0006          INTEGER*4 CT
0007          COMMON/BLK1/
             1 P,PS,PM,PN,ITEMP,RPM,RPMREQ,RPMLST,NS    ,IC,IE,IS,CRATE,ERATE,IT,
             1 SWIG,SWSA,SWFG,SWLD,SWFAIL,SWT
0008          LOGICAL SWT
0009          LOGICAL SWIG,SWFG,SWSA,SWLD,SWFAIL
0010          LOGICAL FIRE
0011          DATA NPTR/6/
0012          INTEGER*2 XXXXX,YYYYY,ZZZZZ,L
0013          COMMON/CHI1/B(3000),T(1000),L(1000)
0014          ZZZZZ=YYYYY+180
0015          ZZZZZ=ZZZZZ-180
0016          GO TO (
             1        2002,2003,2004,2008,2009,2015,2016,2017,2023,2024
             1       ,2031,2032,2033,2034,2035,2036,2039,2040,2041,2044
             1       ,2045,4010,4028,4037,4038,   2,   3,   4,   5,   6
             1       ,   7,   8,   9,  10,  11,  12,  13,  14,  15,  16
             1       ,  17,  18,  19,  20,  21,  22,  23,  24,  25,  26
             1       ,  27,  28,  29,  30,  32,  34,  36,  37,  38,  39
             1       ,  40,  41,  42,  43,  45,  46,  47,  48,  49,  54
             1                                                          ),ZZZZZ
0017          RETURN 1
        C BL03
0018     2009 88888= P.LT.PS
0019          GO TO 99999
        C BL02
0020     2008 88888= P.GE.PS
0021          GO TO 99999
        C BL09
0022     2015 88888= RPM.LT.RPMREQ .AND. RPM.GE.RPMLST
0023          GO TO 99999
        C BL10
0024     2016 88888= RPM.GE.RPMREQ
0025          GO TO 99999
        C BL11
0026     2017 88888= RPM.LT.RPMREQ .AND. RPM.LT.RPMLST
0027          GO TO 99999
        C BL17
0028     2023 88888= FIRE(Z)
0029          GO TO 99999
        C BL18
0030     2024 88888= SWFAIL
0031          GO TO 99999
        C BL25
0032     2031 88888= SWIG
0033          GO TO 99999
        C BL26
0034     2032 88888= .NOT.SWIG
0035          GO TO 99999
        C BL27
0036     2033 88888= SWSA
0037          GO TO 99999
        C BL28
0038     2034 88888= .NOT.SWSA
0039          GO TO 99999
        C BL29
0040     2035 88888= SWFG
0041          GO TO 99999
        C BL30
0042     2036 88888= .NOT.SWFG
0043          GO TO 99999
        C BL33
0044     2039 88888= ITEMP.LE.200 .AND. .NOT.SWLD
0045          GO TO 99999
        C BL34
```

```
 2040 BBBBB= ITEMP.GT.200 .AND. .NOT.SWLD
      GO TO 99999
C BL35
 2041 BBBBB= SWLD
      GO TO 99999
C BL38
 2044 BBBBB= .NOT.SWT
      GO TO 99999
C BL39
 2045 BBBBB= SWT
      GO TO 99999
C BL43
 2002 BBBBB= (P.GE.PM).AND.(IC.EQ.1)
      GO TO 99999
C BL44
 2003 BBBBB= (P.LE.PM).AND.(IC.EQ.0)
      GO TO 99999
C BL45
 2004 BBBBB= .NOT.((P.GE.PM.AND.IC.EQ.1).OR.(P.LE.PV.AND.IC.EQ.0))
      GO TO 99999
C TL04
 4010 TTTTT= PS-P*2.
      GO TO 99999
C TL22
 4028 TTTTT= IWAIT(Z)
      GO TO 99999
 4037 TTTTT= IWAIT(Z)
      GO TO 99999
C TL32
 4038 TTTTT= IT
      GO TO 99999
C L50
   49 CONTINUE
      SWIG=.FALSE.
      SWFG=.FALSE.
      GO TO 99999
C L56
   54 CONTINUE
      RPM=0.
      RPMLST=-1.
      SWIG=.FALSE.
      SWLD=.FALSE.
      SWFG=.FALSE.
      SWSA=.FALSE.
      SWFAIL=.FALSE.
      SWT=.FALSE.
      LQT(1)=0
      LQT(2)=0
      LQT(3)=0
      IF(KOUNT.EQ.20)CT=LQT(1)
      ITEMP=100
      KOUNT=KOUNT+1
      WRITE(NPTR,7056)
 7056 FORMAT('1',43X,'SIMULATION OF ANOTHER START'//'    TIME',40X,
     1.       'STEP JUST COMPLETED',32X,'AIR PRESSURE'//15X,'MAN',50X,
     '.       'ENGINE'//)
      GO TO 99999
C L01
    7 CONTINUE
      KOUNT=1
      WRITE(NPTR,7001)LQT(1),P
 7001 FORMAT('1','    TIME',40X,'STEP JUST COMPLETED',32X,'AIR PRESSURE'
     1        //'                    MAN',50X,'ENGINE'//I7,
     1.        '        MAN ARRIVES AT THIS UNIT',61X,I8)
      GO TO 99999
C L02
    8 CONTINUE
      WRITE(NPTR,7002)LQT(1),P
 7002 FORMAT(' ',I6,'        HE READ STARTING AIR PRESSURE =',I4,' & ',
     1          'DECIDES TO TRY A START',25X,I8)
      GO TO 99999
C L03
    9 CONTINUE
```

```
0100          WRITE(NPTR,7003)LQT(1),P
0101     7003 FORMAT(' ',I6,'       HE READ STARTING AIR PRESSURE =',I4,' & ',
            1          'DECIDES TO WAIT',32X,I8)
0102          GO TO 99999
        C L04
0103       10 CONTINUE
0104          WRITE(NPTR,7004)LQT(1),P
0105     7004 FORMAT(' ',I6,'       WAIT TIME COMPLETED',56X,I8)
0106          GO TO 99999
        C L05
0107       11 CONTINUE
0108          SWIG=.TRUE.
0109          GO TO 99999
        C L06
0110       12 CONTINUE
0111          WRITE(NPTR,7006)LQT(1),P
0112     7006 FORMAT(' ',I6,'       HE TURNED ON IGNITION SWITCH',57X,I8)
0113          GO TO 99999
        C L07
0114       13 CONTINUE
0115          IE=1
0116          SWSA=.TRUE.
0117          GO TO 99999
        C L08
0118       14 CONTINUE
0119          WRITE(NPTR,7008)LQT(1),P
0120     7008 FORMAT(' ',I6,'       HE OPENED STARTING AIR VALVE',57X,I8)
0121          GO TO 99999
        C L09
0122       15 CONTINUE
0123          RPMLST=RPM
0124          RPM=RPM+10.
0125          IRL=RPMLST
0126          IR=RPM
0127          WRITE(NPTR,7009)LQT(1),IR,IRL,P
0128     7009 FORMAT(' ',I6,'       RPM=',I4,'   RPM LAST READING=',I4,
            1                55X,I6)
0129          GO TO 99999
        C L10
0130       16 CONTINUE
0131          RPMLST=RPM
0132          RPM=RPM+10.
0133          IRL=RPMLST
0134          IR=RPM
0135          WRITE(NPTR,7010)LQT(1),IR,P
0136     7010 FORMAT(' ',I6,'       TACH READING WAS ',I6,62X,I8)
0137          GO TO 99999
        C L11
0138       17 CONTINUE
0139          WRITE(NPTR,7011)LQT(1),IR,P
0140     7011 FORMAT(' ',I6,'       TACH READING WAS ',I6,62X,I8)
0141          GO TO 99999
        C L12
0142       18 CONTINUE
0143          WRITE(NPTR,7012)LQT(1),P
0144     7012 FORMAT(' ',I6,'       CLOSED SA VALVE',59X,I8)
0145          SWSA=.FALSE.
0146          IE=0
0147          GO TO 99999
        C L13
0148       19 CONTINUE
0149          WRITE(NPTR,7013)LQT(1),P
0150     7013 FORMAT(' ',I6,'       TURNED OFF IGNITION',65X,I8)
0151          SWIG=.FALSE.
0152          GO TO 99999
        C L14
0153       20 CONTINUE
0154          WRITE(NPTR,7014)LQT(1),P
0155     7014 FORMAT(' ',I6,'       CLOSED FG VALVE',59X,I8)
0156          SWFG=.FALSE.
0157          GO TO 99999
        C L15
0158       21 CONTINUE
0159          WRITE(NPTR,7015)LQT(1),P
0160     7015 FORMAT(' ',I6,'       OPENED FUEL GAS VALVE',64X,I8)
0161          GO TO 99999
        C L16
0162       22 CONTINUE
0163          SWFG=.TRUE.
0164          GO TO 99999
```

```
C L17
   23 CONTINUE
      RPM=RPM+50.
      IR=RPM
      WRITE(NPTR,7017)LQT(1),IR,P
 7017 FORMAT(' ',I6,'        TACH READING WAS',I7,62X,I8)
      GO TO 99999
C L18
   24 CONTINUE
      RPM=RPM-20.
      IR=RPM
      WRITE(NPTR,7018)LQT(1),IR,P
 7018 FORMAT(' ',I6,'        TACH READING WAS',I7,62X,I8)
      GO TO 99999
C L19
   25 CONTINUE
      WRITE(NPTR,7019)LQT(1),P
 7019 FORMAT(' ',I6,'        CLOSED SA VALVE',70X,I8)
      IE=0
      SWSA=.FALSE.
      GO TO 99999
C L20
   26 CONTINUE
      WRITE(NPTR,7020)LQT(1),P
 7020 FORMAT(' ',I6,'        HE SET GOVERNOR TO IDLE',62X,I8)
      GO TO 99999
C L21
   27 CONTINUE
      WRITE(NPTR,7021)LQT(1),P
 7021 FORMAT(I7 ,50X,'IDLE TIMER STARTS',24X,I9)
      GO TO 99999
C L22
   28 CONTINUE
      SWLD=.TRUE.
      WRITE(NPTR,7022)LQT(1),P
 7022 FORMAT(' ',I6,'        HE RETURNS TO UNIT AFTER WAIT',56X,I8)
      GO TO 99999
C L23
   29 CONTINUE
      WRITE(NPTR,7023)LQT(1),P
 7023 FORMAT(' ',I6,'        LOADS UNIT AND LEAVES',64X,I8)
      GO TO 99999
C L24
   30 CONTINUE
      WRITE(NPTR,7024)LQT(1),P
 7024 FORMAT(I7 ,50X,'DISCH & SUCTION VALVES OPEN, BYPASS CLOSES',I8)
      GO TO 99999
C L26
   32 CONTINUE
      WRITE(NPTR,7026)LQT(1),P
 7026 FORMAT(I7 ,50X,'IGNITION SWITCH OPENS    ',15X,I10)
      GO TO 99999
C L28
   34 CONTINUE
      WRITE(NPTR,7028)LQT(1),P
 7028 FORMAT(I7 ,50X,'ENGINE CRANKS ON AIR FOR LAST TIME',I16)
      GO TO 99999
C L30
   36 CONTINUE
      WRITE(NPTR,7030)LQT(1),P
 7030 FORMAT(I7 ,50X,'ENGINE TAKES LAST CHARGE OF FUEL ',I17)
      GO TO 99999
C L31
   37 CONTINUE
      WRITE(NPTR,7031)LQT(1),P
 7031 FORMAT(' ',I6,50X,   'MIN IDLE TIME COMPLETED',10X,I17)
      GO TO 99999
C L32
   38 CONTINUE
      WRITE(NPTR,7032)LQT(1),P
 7032 FORMAT(I7 ,50X,'FLAG DISPLAYED FOR OPERATOR      ',I17)
      GO TO 99999
C L33
   39 CONTINUE
      WRITE(NPTR,7033)LQT(1),ITEMP,P
 7033 FORMAT(I7,50X,'TEMP =',I5,30X,I9)
      ITEMP=ITEMP+10
      GO TO 99999
```

```
C L34
   40 CONTINUE
      SWT=.TRUE.
      SWFG=.FALSE.
      SWIG=.FALSE.
      WRITE(NPTR,7034)LQT(1),P
 7034 FORMAT(I7 ,50X,'IDLE SHUT DOWN DUE TO GAS TEMP   ',I17)
      GO TO 99999
C L35
   41 CONTINUE
      WRITE(NPTR,7035)LQT(1),P
 7035 FORMAT(I7,50X,'IDLE TIME TEMP MONITOR DEACTIVATED',7X,I9)
      GO TO 99999
C L36
   42 CONTINUE
      WRITE(NPTR,7036)LQT(1),P
 7036 FORMAT(I7,50X,'ENGINE TAKES LOAD',24X,I9)
      GO TO 99999
C L37
   43 CONTINUE
      WRITE(NPTR,7037)LQT(1),P
 7037 FORMAT(' ',I6,50X,   'ENGINE OPERATING UNDER LOAD',14X,I9)
      WRITE(NPTR,7050)
 7050 FORMAT(  / '         SHUT DOWN AND SIMULATE ANOTHER START')
      GO TO 99999
C L39
   45 CONTINUE
      SWIG=.FALSE.
      WRITE(NPTR,7039)LQT(1),P
 7039 FORMAT(I7,7X,'HE FINDS ENGINE SHUT DOWN',60X,I8)
      GO TO 99999
C L40
   46 CONTINUE
      WRITE(NPTR,7040)LQT(1),P
 7040 FORMAT(I7,50X,'IGNITION CIRCUIT OFF',21X,I9)
      GO TO 99999
C L41
   47 CONTINUE
      WRITE(NPTR,7041)LQT(1),P
 7041 FORMAT(I7,50X,'FUEL GAS STOPS',27X,I9)
      GO TO 99999
C L43
    2 CONTINUE
 6001 P=P+CRATE*IC-ERATE*IE
      GO TO 99999
C L44
    3 CONTINUE
      GO TO 6001
 8001 CONTINUE
      GO TO 99999
C L45
    4 CONTINUE
      GO TO 6001
 8002 CONTINUE
      GO TO 99999
C L46
    5 CONTINUE
      IC=0
      GO TO 6001
 8003 CONTINUE
      GO TO 99999
C L47
    6 CONTINUE
      IC=1
      GO TO 6001
 8004 CONTINUE
      GO TO 99999
C L48
   48 CONTINUE
99999 RETURN
      END
```

```
0001          BLOCK DATA
0002          COMMON/BLK1/
             1 P,PS,PM,PN,ITEMP,RPM,RPMREQ,RPMLST,NS    ,IC,IE,IS,CRATE,ERATE,IT,
             1 SWIG,SWSA,SWFG,SWLD,SWFAIL,SWT
0003          INTEGER P,PS,PN,PM
0004          LOGICAL SWT
0005          LOGICAL SWIG,SWFG,SWSA,SWLD,SWFAIL
0006          DATA P,PS,PM,PN/250 ,220 ,250 ,200 /,ITEMP/70/,RPM/0./,
             1 RPMLST/-1./,RPMREQ/150./,              IC,IS,IE/0,0,0/,
             1      NS/1220703125/,
             1 CRATE/1./,ERATE/ 2./,IT/0/,
             1 SWIG/.FALSE./,
             1 SWFG/.FALSE./,
             1 SWLD/.FALSE./,
             1 SWT/.FALSE./,
             1 SWFAIL/.FALSE./
0007          END
```

```
0001          LOGICAL FUNCTION FIRE(Z)
0002          LOGICAL FIRE
0003          COMMON/BLK1/
             1 P,PS,PM,PN,ITEMP,RPM,RPMREQ,RPMLST,NS    ,IC,IE,IS,CRATE,ERATE,IT,
             1 SWIG,SWSA,SWFG,SWLD,SWFAIL,SWT
0004          LOGICAL SWT
0005          LOGICAL SWIG,SWFG,SWSA,SWLD,SWFAIL
0006          LOGICAL SW
0007          NSEED=NS
0008          SWFAIL=.FALSE.
0009          CALL ATIME(0.,10.,0.,20,VAL,NSEED)
0010          NS=NSEED
0011          IF(VAL.LE.7.)GO TO 1
0012          SW=.FALSE.
0013          SWFAIL=.TRUE.
0014          GO TO 2
0015        1 SW=.TRUE.
0016        2 FIRE=SW
0017          RETURN
0018          END
```

```
0001          FUNCTION IWAIT(Z)
0002          COMMON/BLK1/
             1 P,PS,PM,PN,ITEMP,RPM,RPMREQ,RPMLST,NS    ,IC,IE,IS,CRATE,ERATE,IT,
             1 SWIG,SWSA,SWFG,SWLD,SWFAIL,SWT
0003          LOGICAL SWT
0004          LOGICAL SWIG,SWFG,SWSA,SWLD,SWFAIL
0005          NSEED=NS
0006          CALL ATIME(  2., 20.,0.,20,VAL,NSEED)
0007          NS=NSEED
0008          WAIT=VAL
0009          IT=WAIT
0010          IWAIT=WAIT
0011          RETURN
0012          END
```

SIMULATION OF ANOTHER START

TIME	MAN	STEP JUST COMPLETED	ENGINE	AIR PRESSURE
1	HE READ STARTING AIR PRESSURE = 221 & DECIDES TO TRY A START			
2	HE TURNED ON IGNITION SWITCH			222
4	HE OPENED STARTING AIR VALVE			224
5	RPM= 10 RPM LAST READING= 0			223
6	RPM= 20 RPM LAST READING= 10			222
7	RPM= 30 RPM LAST READING= 20			221
8	RPM= 40 RPM LAST READING= 30			220
9	RPM= 50 RPM LAST READING= 40			219
10	RPM= 60 RPM LAST READING= 50			218
11	RPM= 70 RPM LAST READING= 60			217
12	RPM= 80 RPM LAST READING= 70			216
13	RPM= 90 RPM LAST READING= 80			215
14	RPM= 100 RPM LAST READING= 90			214
15	RPM= 110 RPM LAST READING= 100			213
16	RPM= 120 RPM LAST READING= 110			212
17	RPM= 130 RPM LAST READING= 120			211
18	RPM= 140 RPM LAST READING= 130			210
19	RPM= 150 RPM LAST READING= 140			209
20	TACH READING WAS 160			208
23	OPENED FUEL GAS VALVE			205
28	TACH READING WAS 210			200
30	CLOSED SA VALVE			198
31			ENGINE CRANKS ON AIR FOR LAST TIME	199
35	HE SET GOVERNOR TO IDLE			203
35			IDLE TIMER STARTS	203
38			MIN IDLE TIME COMPLETED	206
38			FLAG DISPLAYED FOR OPERATOR	206
39			TEMP = 100	207
40			TEMP = 110	208
41			TEMP = 120	209
42			TEMP = 130	210
43			TEMP = 140	211
44			TEMP = 150	212
45			TEMP = 160	213
46			TEMP = 170	214
47			TEMP = 180	215
48			TEMP = 190	216
49			TEMP = 200	217
50			IDLE SHUT DOWN DUE TO GAS TEMP	218
51			ENGINE TAKES LAST CHARGE OF FUEL	219
51			IGNITION SWITCH OPENS	219
52			FUEL GAS STOPS	220
52			IGNITION CIRCUIT OFF	220
53	HE RETURNS TO UNIT AFTER WAIT			221
54	HE FINDS ENGINE SHUT DOWN			222

SIMULATION OF ANOTHER START

TIME	STEP JUST COMPLETED		AIR PRESSURE
	MAN	ENGINE	
1	HE READ STARTING AIR PRESSURE = 226 & DECIDES TO TRY A START		
2	HE TURNED ON IGNITION SWITCH		227
4	HE OPENED STARTING AIR VALVE		229
5	RPM= 10 RPM LAST READING= 0		228
6	RPM= 20 RPM LAST READING= 10		227
7	RPM= 30 RPM LAST READING= 20		226
8	RPM= 40 RPM LAST READING= 30		225
9	RPM= 50 RPM LAST READING= 40		224
10	RPM= 60 RPM LAST READING= 50		223
11	RPM= 70 RPM LAST READING= 60		222
12	RPM= 80 RPM LAST READING= 70		221
13	RPM= 90 RPM LAST READING= 80		220
14	RPM= 100 RPM LAST READING= 90		219
15	RPM= 110 RPM LAST READING= 100		218
16	RPM= 120 RPM LAST READING= 110		217
17	RPM= 130 RPM LAST READING= 120		216
18	RPM= 140 RPM LAST READING= 130		215
19	RPM= 150 RPM LAST READING= 140		214
20	TACH READING WAS 160		213
23	OPENED FUEL GAS VALVE		210
28	TACH READING WAS 210		205
30	CLOSED SA VALVE		203
31		ENGINE CRANKS ON AIR FOR LAST TIME	204
35	HE SET GOVERNOR TO IDLE		208
35		IDLE TIMER STARTS	208
52	HE RETURNS TO UNIT AFTER WAIT		225
53		MIN IDLE TIME COMPLETED	225
53		FLAG DISPLAYED FOR OPERATOR	226
54	LOADS UNIT AND LEAVES		227
54		DISCH & SUCTION VALVES OPEN, BYPASS CLOSES	227
54		IDLE TIME TEMP MONITOR DEACTIVATED	227
55		ENGINE TAKES LOAD	223
56		ENGINE OPERATING UNDER LOAD	229
SHUT DOWN AND SIMULATE ANOTHER START			
56		ENGINE TAKES LAST CHARGE OF FUEL	229
56		IGNITION SWITCH OPENS	229
57		FUEL GAS STOPS	230
57		IGNITION CIRCUIT OFF	230

TIME	STEP JUST COMPLETED		AIR PRESSURE
	MAN	ENGINE	
0	MAN ARRIVES AT THIS UNIT		250
1	HE READ STARTING AIR PRESSURE = 250 & DECIDES TO TRY A START		
2	HE TURNED ON IGNITION SWITCH		250
4	HE OPENED STARTING AIR VALVE		250
5	RPM= 10 RPM LAST READING= 0		248
6	RPM= 20 RPM LAST READING= 10		246
7	RPM= 30 RPM LAST READING= 20		244
8	RPM= 40 RPM LAST READING= 30		242
9	RPM= 50 RPM LAST READING= 40		240
10	RPM= 60 RPM LAST READING= 50		238
11	RPM= 70 RPM LAST READING= 60		236
12	RPM= 80 RPM LAST READING= 70		234
13	RPM= 90 RPM LAST READING= 80		232
14	RPM= 100 RPM LAST READING= 90		230
15	RPM= 110 RPM LAST READING= 100		228
16	RPM= 120 RPM LAST READING= 110		226
17	RPM= 130 RPM LAST READING= 120		224
18	RPM= 140 RPM LAST READING= 130		222
19	RPM= 150 RPM LAST READING= 140		220
20	TACH READING WAS 160		218
23	OPENED FUEL GAS VALVE		212
28	TACH READING WAS 210		202
30	CLOSED SA VALVE		198
31		ENGINE CRANKS ON AIR FOR LAST TIME	199
35	HE SET GOVERNOR TO IDLE		203
35		IDLE TIMER STARTS	203
46	HE RETURNS TO UNIT AFTER WAIT		214
50		MIN IDLE TIME COMPLETED	213
50		FLAG DISPLAYED FOR OPERATOR	218
51	LOADS UNIT AND LEAVES		219
51		DISCH & SUCTION VALVES OPEN, BYPASS CLOSES	219
51		IDLE TIME TEMP MONITOR DEACTIVATED	219
52		ENGINE TAKES LOAD	220
53		ENGINE OPERATING UNDER LOAD	221
SHUT DOWN AND SIMULATE ANOTHER START			
53		ENGINE TAKES LAST CHARGE OF FUEL	221
53		IGNITION SWITCH OPENS	221
54		FUEL GAS STOPS	222
54		IGNITION CIRCUIT OFF	222

SIMULATION OF ANOTHER START

TIME	STEP JUST COMPLETED		AIR PRESSURE
	MAN	ENGINE	
1	HE READ STARTING AIR PRESSURE = 229 & DECIDES TO TRY A START		
2	HE TURNED ON IGNITION SWITCH		230
4	HE OPENED STARTING AIR VALVE		232
5	RPM= 10 RPM LAST READING= 0		231
6	RPM= 20 RPM LAST READING= 10		230
7	RPM= 30 RPM LAST READING= 20		229
8	RPM= 40 RPM LAST READING= 30		228
9	RPM= 50 RPM LAST READING= 40		227
10	RPM= 60 RPM LAST READING= 50		226
11	RPM= 70 RPM LAST READING= 60		225
12	RPM= 80 RPM LAST READING= 70		224
13	RPM= 90 RPM LAST READING= 80		223
14	RPM= 100 RPM LAST READING= 90		222
15	RPM= 110 RPM LAST READING= 100		221
16	RPM= 120 RPM LAST READING= 110		220
17	RPM= 130 RPM LAST READING= 120		219
18	RPM= 140 RPM LAST READING= 130		218
19	RPM= 150 RPM LAST READING= 140		217
20	TACH READING WAS 160		216
23	OPENED FUEL GAS VALVE		213
28	TACH READING WAS 140		208
31	CLOSED FG VALVE		205
32		ENGINE TAKES LAST CHARGE OF FUEL	204
33	CLOSED SA VALVE		203
33		FUEL GAS STOPS	203
34	TURNED OFF IGNITION		204
34		ENGINE CRANKS ON AIR FOR LAST TIME	204
35		IGNITION SWITCH OPENS	205
36		IGNITION CIRCUIT OFF	206

SIMULATION OF ANOTHER START

TIME	STEP JUST COMPLETED: MAN	STEP JUST COMPLETED: ENGINE	AIR PRESSURE
1	HE READ STARTING AIR PRESSURE = 240 & DECIDES TO TRY A START		
2	HE TURNED ON IGNITION SWITCH		241
4	HE OPENED STARTING AIR VALVE		243
5	RPM= 10 RPM LAST READING= 3		242
6	RPM= 20 RPM LAST READING= 10		241
7	RPM= 30 RPM LAST READING= 20		240
8	RPM= 40 RPM LAST READING= 30		239
9	RPM= 50 RPM LAST READING= 40		238
10	RPM= 60 RPM LAST READING= 50		237
11	RPM= 70 RPM LAST READING= 60		236
12	RPM= 80 RPM LAST READING= 70		235
13	RPM= 90 RPM LAST READING= 80		234
14	RPM= 100 RPM LAST READING= 90		233
15	RPM= 110 RPM LAST READING= 100		232
16	RPM= 120 RPM LAST READING= 110		231
17	RPM= 130 RPM LAST READING= 120		230
18	RPM= 140 RPM LAST READING= 130		229
19	RPM= 150 RPM LAST READING= 140		228
20	TACH READING WAS 160		227
23	OPENED FUEL GAS VALVE		224
28	TACH READING WAS 140		219
31	CLOSED FG VALVE		216
32		ENGINE TAKES LAST CHARGE OF FUEL	215
33	CLOSED SA VALVE		214
33		FUEL GAS STOPS	214
34	TURNED OFF IGNITION		215
34		ENGINE CRANKS ON AIR FOR LAST TIME	215
35		IGNITION SWITCH OPENS	216
36		IGNITION CIRCUIT OFF	217

13. APPENDIX F Continuous Process Program

```
*****************************************************************************
                          MODEL REPRESENTATION INPUT
*****************************************************************************
L     TANK                1       1
L     LID                 1       1
L     VID                 1       1
L     VDD                 1       1
L     ENV                 1       1
W     I01   TANK          0       +
W     S01   TANK          1       +
W     S02   TANK          1       +
W     S03   LID           1       +
W     S04   LID           1       +
W     S05   LID           1       +
W     S06   VID           1       +
W     S07   VID           1       +
W     S08   VID           1       +
W     S09   VDD           1       +
W     S10   ENV           1       +
X     L01   I01   S01     1       0       -1
X     L02   S01   S03     -1      1       -1
X     L03   S01   S01     -1      2
X     L04   S01   S02     -1      1       -1
X     L05   S03   S04     -1      1       -1
X     L06   S03   S05     -1      1       -1
X     L07   S03   S06     -1      1       -1
X     L08   S06   S07     1       1       -1
X     L09   S06   S08     1       1       -1
X     L10   S06   S05     -1      2
X     L11   S06   S09     -1      1       -1
X     L12   S09   S10     1       1       -1
X     L13   S10   S01     1       1       -1
./
I     I01
./
OHDRP
OSYML
OSACT
T     10000
```

INITIAL MODEL REPRESENTATION (PAGE 1)

	SUBSYSTEMS				SYSTEM-STATES					TRANSITIONS						
	USER				USER					USER		ETA(J):				
LINE	SYMBOL	RHO	DELTA	GAMMA	SYMBOL	ETA	MJ	ALPHA	STATUS	SYMBOL	KAPPA	ETA	LINE	BETA	TAU	PHI
1	TANK	1	1	1												
2					I01	1	0	+	IW							
3										L01	1	2	5	1	0	-1
4					S02	3	1	+	X							
5					S01	2	1	+	IW							
6										L02	2	4	12	-1	1	-1
7										L03	3	2	5	-1	2	0
8										L04	4	3	4	-1	1	-1
9	LID	2	1	1												
10					S05	6	1	+	X							
11					S04	5	1	+	X							
12					S03	4	1	+	IW							
13										L05	5	5	11	-1	1	-1
14										L06	6	6	10	-1	1	-1
15										L07	7	7	19	-1	1	-1
16	VID	3	1	1												
17					S08	9	1	+	X							
18					S07	8	1	+	X							
19					S06	7	1	+	IW							
20										L08	8	8	18	1	1	-1
21										L09	9	9	17	1	1	-1
22										L10	10	7	19	-1	2	0
23										L11	11	10	25	-1	1	-1
24	VDD	4	1	1												
25					S09	10	1	+	IW							
26										L12	12	11	23	1	1	-1
27	ENV	5	1	1												
28					S10	11	1	+	IW							
29										L13	13	2	5	1	1	-1

SYMBOL LISTS

RHO	L-NAME	RHO	L-NAME	RHO	L-NAME	RHO	L-NAME
1	TANK	3	VIO	4	VOO	5	ENV
2	LIO						

ETA	W-NAME	ETA	W-NAME	ETA	W-NAME	ETA	W-NAME
1	I01	4	S03	7	S06	10	S09
2	S01	5	S04	8	S07	11	S10
3	S02	6	S05	9	S08		

KAPPA	X-NAME	KAPPA	X-NAME	KAPPA	X-NAME	KAPPA	X-NAME
1	L01	5	L05	8	L08	11	L11
2	L02	6	L06	9	L09	12	L12
3	L03	7	L07	10	L10	13	L13
4	L04						


```
0001          SUBROUTINE GETSIG(X,SIGMAY,SIGMAZ)
0002          DIMENSION SIGY(20),SIGZ(20)
0003          DATA SIGY /6.27, 9.87, 11.8, 15.75, 19.3, 22.97, 26.2, 30.2,
             1          33.46,33.7 , 40.4, 43.6, 46.6, 49.9, 54.1, 56.8,
             1          60.7 ,64.0 , 67.3, 69.6  /
0004          DATA SIGZ /5.95, 7.09, 9.89, 10.86, 11.5, 12.47, 14.11, 15.75,
             1          17.06,18.40,20.01, 21.65,22.97, 24.23, 25.59, 26.93,
             1        28.87,30.51,31.17, 32.15 /
0005          DIMENSION XF(20)
0006          DATA XF/100.,200.,300.,400.,500.,600.,700.,800.,900.,1000.,
             1   1100.,1200.,1300.,1400.,1500.,1600.,1700.,1800.,
             1    1900.,2000./
0007          IF(X.LT.100.)GO TO 1
0008          IF(X.GT.2000.)GO TO 2
0009          NDIM=20
0010          CALL READY(X,XF,SIGY,VAL,NDIM)
0011          SIGMAY=VAL
0012          CALL READY(X,XF,SIGZ,VAL,NDIM)
0013          SIGMAZ=VAL
0014          RETURN
0015        1 SIGMAY=6.27
0016          SIGMAZ=5.95
0017          RETURN
0018        2 SIGMAY=69.6
0019          SIGMAZ=32.15
0020          RETURN
0021          END
```

```
0001          SUBROUTINE BTP(88888,TTTTT,YYYYY,*)
0002          IMPLICIT INTEGER*2(T),LOGICAL*1(B)
0003          COMMON/TERM/CT
0004          COMMON/LAMBDA/LDELT(100),LQT(100)
0005          INTEGER*4 CT
0006          REAL*4 ID,TIME,TFULL,TEMPTY,TSTRIP
0007          LOGICAL SW5,SW7
0008          DATA XL/900./, XW/300./, ID/140./, OD/150./, H/100./,AFLOW/20./,
             1     XOW/1000./, HO/6./, RHO/25.9/, RHOV/0.1075/ ,NSTRIP /10/
0009          DATA NPTR/6/
0010          INTEGER*2 XXXXX,YYYYY,ZZZZZ,L
0011          COMMON/CHI1/B(3000),T(1000),L(1000)
0012          ZZZZZ=YYYYY+180
0013          ZZZZZ=ZZZZZ-180
0014          GO TO (
             1         2002,2003,2004,2005,2006,2007,2010,2011,  1,  2
             1        ,   4,   5,   6,   7,   8,   9,  11,  12,  13,  13
             1                                                          ),ZZZZZ
0015          RETURN 1
        C BL02
0016     2002 88888= H.GT.0.
0017          GO TO 99999
        C BL03
0018     2003 88888= (H.GT.0.).AND. ((DPOOL+DVAPOR).LT.HO)
0019          GO TO 99999
        C BL04
0020     2004 88888= H.LE.0.
0021          GO TO 99999
        C BL05
0022     2005 88888= APOOL.LT.(XL*XW-AOT)
0023          GO TO 99999
        C BL06
0024     2006 88888= APOOL.GE.(XL*XW-AOT)
0025          GO TO 99999
        C BL07
0026     2007 88888= SW7
0027          GO TO 99999
        C BL10
0028     2010 88888= (DPOOL+DVAPOR).LT.HO
0029          GO TO 99999
        C BL11
0030     2011 88888= (DPOOL+DVAPOR).GE.HO
0031          GO TO 99999
        C L01
0032        1 CONTINUE
0033          XOUNT=1
0034          APOOL=0.
0035          DVAPOR=0.
0036          SW5=.FALSE.
0037          DPOOL=1.
0038          VOLVAP=0.
0039          QDIKE=0.
0040          ANGLE=0.01745*3.0
0041          PL=XL
0042          PW=XW
0043          WINDSP=6.0
0044          AIT = 3.1415*ID**2 /4.
0045          AOT = 3.1415*OD**2 /4.
0046          SW7 =.TRUE.
0047          WRITE(NPTR,7006)
0048     7006 FORMAT('1',50X,'LNG SPILL SIMULATION'///
             1   '       T.              H              QT             QD       ',
             1   '       DL              DV             APOOL          RR'//)
0049          GO TO 99999
        C L02
0050        2 CONTINUE
0051          QT = AFLOW * SQRT(2.*32.2* H)
0052          QDIKE = QDIKE + QT
0053          H = H- QT/AIT
0054          XT=LQT(1)/2.
0055          WRITE(NPTR,7004)XT,H,QT,QDIKE
0056     7004 FORMAT(' ',4G14.7)
```

```
0057              GO TO 99999
            C L04
0058            4 CONTINUE
0059              TEMPTY = LQT(1)/2
0060              WRITE(NPTR,7001)TEMPTY
0061         7001 FORMAT(' ',' TANK EMPTY AT T = ',G14.7,' MIN')
0062              GO TO 99999
            C L05
0063            5 CONTINUE
0064              APOOL = QDIKE/DPOOL
0065              XT=LQT(1)/2.
0066              WRITE(NPTR,7008)XT,APOOL
0067         7008 FORMAT(' ',G14.7,70X,G14.7)
0068              GO TO 99999
            C L06
0069            6 CONTINUE
0070              APOOL= PL*PW-AOT
0071              DPOOL= DPOOL + QT/APOOL
0072              PL= XL + 4.* DPOOL
0073              PW= XW + 4.* DPOOL
0074              SW6=.TRUE.
0075              XT=LQT(1)/2.
0076              WRITE(NPTR,7007)XT,DPOOL,APOOL
0077         7007 FORMAT(' ',G14.7,42X,G14.7,14X,G14.7)
0078              GO TO 99999
            C L07
0079            7 CONTINUE
0080              SW7 =.FALSE.
0081              GO TO 99999
            C L08
0082            8 CONTINUE
0083              XT=LQT(1)/2.
0084              TIME=XT/60.
0085              CALL GETRR(RR,TIME)
0086              DELTD = RR/(60.* 12.)
0087              DELTV =DELTD*APOOL
0088              DELTW = DELTV *RHO
0089              DPOOL = DPOOL - DELTD
0090              IF(.NOT.SW6)GO TO 99999
0091              PL = PL - 4 * DELTD
0092              PW = PW - 4 * DELTD
0093              XT=LQT(1)/2.
0094              WRITE(NPTR,7005)XT,DPOOL,DVAPOR,APOOL ,RR
0095         7005 FORMAT(' ',G14.7,42X,4G14.7)
0096              GO TO 99999
            C L09
0097            9 CONTINUE
0098              DELTVV =DELTW / RHOV
0099              IF(APOOL.LT.(XL*XW-AOT))GO TO 6002
0100              CALL DDVPR(DELTVV, VL, VW, DELTDV,AOT)
0101              VL=VL+4.*DELTDV
0102              VW=VW+4.*DELTDV
0103              DVAPOR= DVAPOR + DELTDV
0104              GO TO 6003
0105         6002 VVOID=(XL*XW-AOT-APOOL)*DPOOL
0106              VOLVAP=VOLVAP+DELTVV
0107              IF(VOLVAP.GT.VVOID)GO TO 6004
0108              GO TO 6003
0109         6004 VTOP=VOLVAP-VVOID
0110              VXL=XL+4.*DPOOL
0111              VXW=XW+4.*DPOOL
0112              CALL DDVPR(VTOP,VXL,VXW,DVAPOR,AOT  )
0113              VL=VXL+4*DVAPOR
0114              VW=VXW+4*DVAPOR
0115         6003 CONTINUE
0116              XT=LQT(1)/2.
0117              WRITE(NPTR,7005)XT,DPOOL,DVAPOR,APOOL ,RR
0118              GO TO 99999
            C L11
0119           11 CONTINUE
0120              TFULL = LQT(1)/2
0121              TFULL = TFULL/60.
```

```
0122          WRITE(NPTR,7002)TFULL
0123     7002 FORMAT(' ',' VAPOR REACHES TOP OF DIKE AT T = ',G14.7, ' MIN')
0124          GO TO 99999
        C L12
0125       12 CONTINUE
0126          XLV= XL +4.*HD
0127          XWV= XW +4.*HD
0128          WSTRIP= XLV/NSTRIP
0129          HE = WSTRIP* TAN(ANGLE) + HD
0130          ASTRIP= WSTRIP*XWV -AOT/NSTRIP
0131          TSTRIP=(WSTRIP/WINDSP) /60.
0132          XTOTAL=0.
0133          YD = XWV/2.
0134          WRITE(NPTR,7009)WSTRIP,HE,ASTRIP,TSTRIP,YD
0135     7009 FORMAT('0',5G14.7)
0136          DO 6001 I=1,NSTRIP
0137          X=XOW + WSTRIP*(NSTRIP - I)
0138          CALL GETSIG (X,SIGMAY,SIGMAZ)
0139          SIGMAZ=SIGMAZ+HE
0140          TIME=TFULL + TSTRIP*(I-1)
0141          CALL GETRR(RR, TIME)
0142          Q=RR * RHO /720.
0143          QL= Q * ASTRIP/XWV
0144          XXOO =(2.*QL/(WINDSP*SIGMAZ*2.*SQRT(2.)))*
             1   ERF(YD/(SIGMAY*SQRT(2.)))
             1        * EXP(-(HE**2/(2*SIGMAZ **2)))
0145          WRITE(NPTR,7010)X,SIGMAY,SIGMAZ,TIME,RR,Q,QL,XXOO
0146     7010 FORMAT(' ',8G14.7)
0147          XTOTAL = XTOTAL + XXOO
0148     6001 CONTINUE
0149          PCTXOO =XTOTAL*(5.0/0.00222)
0150          WRITE(NPTR,7003)PCTXOO
0151     7003 FORMAT(' ', ' CONCENTRATION AT DOWNWIND POINT = ', G14.7,
             1    ' PERCENT')
0152          GO TO 99999
        C L13
0153       13 CONTINUE
0154          LQT(1)=0
0155          LQT(2)=0
0156          LQT(3)=0
0157          LQT(4)=0
0158          LQT(5)=0
0159          KOUNT=KOUNT+1
0160          IF(KOUNT.EQ.6 )CT=LQT(1)
0161          AFLOW=AFLOW+20.
0162          H=100.
0163          VOLVAP=0.
0164          APOOL=0.
0165          DVAPOR=0.
0166          SW6=.FALSE.
0167          DPOOL=1.
0168          QDIKE=0.
0169          ANGLE=0.01745*3.0
0170          PL=XL
0171          PW=XW
0172          WINDSP=6.0
0173          AIT = 3.1416*ID**2 /4.
0174          AOT = 3.1416*OD**2 /4.
0175          SW7 =.TRUE.
0176          WRITE(NPTR,7006)
0177     99999 RETURN
0178          END
```

```
0001          SUBROUTINE READY(X,ARG,VAL,Y,NDIM)
0002          DIMENSION ARG(20),VAL(20)
0003          DATA NPTR/6/
0004          IF((X.LT.ARG(1)).OR.(X.GT.ARG(NDIM)))GO TO 1
0005          NSPACE=NDIM - 1
0006          DO 2 I=1,NSPACE
0007          IF(X.EQ.ARG(I))GO TO 3
0008          IF((X.GT.ARG(I)).AND.(X.LE.ARG(I+1)))GO TO 4
0009        2 CONTINUE
0010          WRITE(NPTR,101)
0011      101 FORMAT(' ','FAULT FORMAT 101 IN READY')
0012          CALL EXIT
0013        1 WRITE(NPTR,102)
0014      102 FORMAT(' ','X IS OUTSIDE RANGE OF ARG')
0015          CALL EXIT
0016        3 Y=VAL(I)
0017          RETURN
0018        4 Y=VAL(I+1)-(((VAL(I+1)-VAL(I))*(ARG(I+1)-X))/(ARG(I+1)-ARG(I)))
0019          RETURN
0020          END
```

```
0001          SUBROUTINE GETRR(RR,TIME)
0002          DIMENSION RISUL(6),TISUL(6),REARTH(6),TEARTH(6)
0003          DATA RISUL /0.292, 0.055, 0.040, 0.035, 0.031, 0.030 /
0004          DATA TISUL /0.30 , 2.30 , 4.30 , 6.30 , 8.3  , 10.3  /
0005          DATA REARTH/0.509,0.488,0.428,0.280,0.117,0.0305/
0006          DATA TEARTH/0.0005,0.00514,0.0514,0.514,5.14,55.1/
0007          NDIM=6
0008          IF(TIME.GT.10.3)GO TO 1
0009          IF(TIME.LT.0.0005)GO TO 4
0010          IF(TIME.LT. 0.3)GO TO 2
0011          GO TO 3
0012        1 RR=0.03
0013          RETURN
0014        2 CALL READY( TIME, TEARTH, REARTH, RRIPM, NDIM)
0015          RR=RRIPM
0016          RETURN
0017        3 CALL READY( TIME, TISUL, RISUL, RRIPM, NDIM)
0018          RR=RRIPM
0019          RETURN
0020        4 RR=0.509
0021          RETURN
0022          END
```

```
0001          SUBROUTINE DOVPR(DVV,VL,VW,DOV,AOT)
0002          D=0.01
0003        2 AT=(VL+4.*D  )*(VW+4*D  )
0004          AB=VL*VW
0005          AAVG=(AT+AB)/2.
0006          V=AAVG*D-AOT*D
0007          IF(V.GE.DVV)GO TO 1
0008          D=D+0.01
0009          GO TO 2
0010        1 DOV=D
0011          RETURN
0012          END
```

LNG SPILL SIMULATION

T	H	QT	QD	DL	DY	APDDL	RR
0.5000000	99.89574	1604.992	1604.992				
1.000000						1604.992	
1.500000	99.79152	1604.155	3209.146				
1.500000				0.9993580	0.0	1604.992	0.4522412
2.000000						3211.208	
2.500000	99.68736	1603.318	4812.461				
2.500000				0.9987460	0.0	3211.208	0.4405242
3.000000						4318.500	
3.500000	99.58325	1602.481	6414.941				
3.500000				0.9981546	0.0	4318.500	0.4257817
4.000000						6426.801	
4.500000	99.47920	1601.644	8016.582				
4.500000				0.9975706	0.0	6426.801	0.4204495
5.000000						8036.102	
5.500000	99.37520	1600.807	9617.387				
5.500000				0.9969940	0.0	8036.102	0.4151173
6.000000						9646.333	
6.500000	99.27125	1599.970	11217.36				
6.500000				0.9964249	0.0	9646.333	0.4097852
7.000000						11257.60	
7.500000	99.16737	1599.133	12816.49				
7.500000				0.9958631	0.0	11257.60	0.4044533
8.000000						12869.73	
8.500000	99.06354	1598.296	14414.78				
8.500000				0.9953087	0.0	12869.73	0.3991239
9.000000						14482.72	
9.500000	98.95975	1597.459	16012.24				
9.500000				0.9947618	0.0	14482.72	0.3937887
10.00000						16096.55	
10.50000	98.85603	1596.622	17608.86				
10.50000				0.9942222	0.0	16096.55	0.3884555
11.00000						17711.19	
11.50000	98.75237	1595.785	19204.64				
11.50000				0.9936901	0.0	17711.19	0.3831243
12.00000						19326.59	
12.50000	98.64874	1594.948	20799.59				
12.50000				0.9931653	0.0	19326.59	0.3777921
13.00000						20942.72	
13.50000	98.54518	1594.111	22393.70				
13.50000				0.9926480	0.0	20942.72	0.3724599
14.00000						22559.55	
14.50000	98.44168	1593.274	23985.97				
14.50000				0.9921381	0.0	22559.55	0.3671273
15.00000						24177.04	
15.50000	98.33823	1592.437	25579.40				
15.50000				0.9916356	0.0	24177.04	0.3617955
16.00000						25795.16	
16.50000	98.23483	1591.601	27171.00				
16.50000				0.9911404	0.0	25795.16	0.3564634
17.00000						27413.38	
17.50000	98.13148	1590.763	28761.75				
17.50000				0.9906527	0.0	27413.38	0.3511313
18.00000						29033.14	
18.50000	98.02820	1589.926	30351.69				
18.50000				0.9902485	0.0	29033.14	0.2910124
19.00000						30650.57	
19.50000	97.92495	1589.089	31940.77				

41.50000				0.9817091	0.0	66308.44	0.2455873
42.00000						67931.44	
42.50000	95.56554	1569.839	68258.75				
42.50000				0.9813707	0.0	67931.44	0.2436123
43.00000						69554.44	
43.50000	95.46361	1569.002	69827.75				
43.50000				0.9810351	0.0	69554.44	0.2416373
44.00000						71177.63	
44.50000	95.36172	1568.165	71395.88				
44.50000				0.9807022	0.0	71177.63	0.2396623
45.00000						72800.75	
45.50000	95.25990	1567.328	72963.19				
45.50000				0.9803721	0.0	72800.75	0.2376873
46.00000						74423.94	
46.50000	95.15814	1566.491	74529.63				
46.50000				0.9800447	0.0	74423.94	0.2357123
47.00000						76047.13	
47.50000	95.05643	1565.654	76095.25				
47.50000				0.9797200	0.0	76047.13	0.2337373
48.00000						77670.38	
48.50000	94.95477	1564.817	77660.06				
48.50000				0.9793981	0.9999998E-02	77670.38	0.2317623
49.00000						79293.53	
49.50000	94.85316	1563.980	79224.00				
49.50000				0.9790789	0.3999999E-01	79293.53	0.2297873
50.00000						80916.81	
50.50000	94.75162	1563.143	80787.13				
50.50000				0.9787624	0.6999993E-01	80916.81	0.2278123
51.00000						82540.06	
51.50000	94.65012	1562.306	82349.38				
51.50000				0.9784487	0.9999990E-01	82540.06	0.2258373
52.00000						84163.19	
52.50000	94.54868	1561.469	83910.81				
52.50000				0.9781378	0.1399999	84163.19	0.2238623
53.00000						85786.25	
53.50000	94.44730	1560.632	85471.44				
53.50000				0.9778295	0.1699998	85786.25	0.2218873
54.00000						87409.31	
54.50000	94.34596	1559.795	87031.19				
54.50000				0.9775241	0.1999998	87409.31	0.2199124
55.00000						89032.25	
55.50000	94.24469	1558.958	88590.13				
55.50000				0.9772214	0.2299998	89032.25	0.2179374
56.00000						90655.06	
56.50000	94.14346	1558.121	90148.13				
56.50000				0.9769214	0.2599999	90655.06	0.2159623
57.00000						92277.81	
57.50000	94.04230	1557.284	91705.44				
57.50000				0.9766241	0.2899997	92277.81	0.2139873
58.00000						93900.44	
58.50000	93.94118	1556.447	93261.88				
58.50000				0.9763296	0.3299997	93900.44	0.2120124
59.00000						95522.94	
59.50000	93.84012	1555.610	94817.44				
59.50000				0.9760379	0.3599997	95522.94	0.2100374
60.00000						97145.19	
60.50000	93.73911	1554.773	96372.19				
60.50000				0.9757488	0.3899996	97145.19	0.2080624
61.00000						98767.38	
61.50000	93.63815	1553.936	97926.06				
61.50000				0.9754625	0.4199996	98767.38	0.2060874
62.00000						100389.3	
62.50000	93.53725	1553.099	99479.13				
62.50000				0.9751790	0.4599995	100389.3	0.2041125
63.00000						102011.1	
63.50000	93.43642	1552.262	101031.4				

151.5000				0.9606805	3.029852	242384.0	0.5331250E-01
152.0000						243941.8	
152.5000	84.67912	1477.771	235327.9				
152.5000				0.9606066	3.049850	243941.8	0.5318750E-01
153.0000						245498.9	
153.5000	84.58318	1476.934	237304.8				
153.5000				0.9605328	3.069849	245498.9	0.5306250E-01
154.0000						247055.3	
154.5000	84.48727	1476.096	238780.8				
154.5000				0.9604593	3.099847	247055.3	0.5293749E-01
155.0000						248611.1	
155.5000	84.39143	1475.259	240256.1				
155.5000				0.9603859	3.119845	248611.1	0.5281249E-01
156.0000						250166.1	
156.5000	84.29565	1474.423	241730.4				
156.5000				0.9603127	3.139844	250166.1	0.5268750E-01
157.0000						251720.5	
157.5000	84.19992	1473.585	243204.0				
157.5000				0.9602397	3.159842	251720.5	0.5256249E-01
158.0000						253274.3	
158.5000	84.10425	1472.749	244676.7				
158.5000				0.9601669	3.179842	253274.3	0.5243750E-01
159.0000				0.9600035		252328.5	
159.5000	84.00862	1471.912	246148.6				
159.5000				0.9599308	3.179842	252328.5	0.5231250E-01
159.5000				0.9599308	3.199841	252328.5	0.5231250E-01
160.0000				0.9716585		256979.6	
160.5000	83.91306	1471.075	247619.6				
160.5000				0.9715860	3.199841	256979.6	0.5218750E-01
160.5000				0.9715860	3.219841	256979.6	0.5218750E-01
161.0000				0.9773099		257035.8	
161.5000	83.81754	1470.238	249089.8				
161.5000				0.9772375	3.219841	257035.8	0.5206249E-01
161.5000				0.9772375	3.239841	257035.8	0.5206249E-01
162.0000				0.9829575		257034.2	
162.5000	83.72208	1469.401	250559.2				
162.5000				0.9828853	3.239841	257034.2	0.5193749E-01
162.5000				0.9828853	3.259840	257034.2	0.5193749E-01
163.0000				0.9835014		257051.3	
163.5000	83.62666	1468.564	252027.3				
163.5000				0.9835294	3.259840	257051.3	0.5181250E-01
163.5000				0.9835294	3.279840	257051.3	0.5181250E-01
164.0000				0.9942417		257088.8	
164.5000	83.53131	1467.727	253495.4				
164.5000				0.9941699	3.279840	257088.8	0.5168750E-01
164.5000				0.9941699	3.299839	257088.8	0.5168750E-01
165.0000				0.9998783		257115.9	
165.5000	83.43602	1466.890	254962.3				
165.5000				0.9998066	3.299839	257115.9	0.5156249E-01
165.5000				0.9998066	3.319839	257115.9	0.5156249E-01
166.0000				1.005510		257143.3	
166.5000	83.34077	1466.053	256428.3				
166.5000				1.005439	3.319839	257143.3	0.5143749E-01
166.5000				1.005439	3.339838	257143.3	0.5143749E-01
167.0000				1.011139		257170.4	
167.5000	83.24559	1465.216	257893.5				
167.5000				1.011067	3.339838	257170.4	0.5131250E-01
167.5000				1.011067	3.359838	257170.4	0.5131250E-01
168.0000				1.016764		257197.6	
168.5000	83.15045	1464.379	259357.9				
168.5000				1.016692	3.359838	257197.6	0.5118750E-01
168.5000				1.016692	3.379837	257197.6	0.5118750E-01
169.0000				1.022385		257224.7	
169.5000	83.05537	1463.542	260821.4				
169.5000				1.022313	3.379837	257224.7	0.5106249E-01
169.5000				1.022313	3.399837	257224.7	0.5106249E-01

219.5000				1.293695	4.379812	258552.6	0.4481250E-01
219.5000				1.293695	4.399812	258552.6	0.4481250E-01
220.0000				1.304192		258588.9	
220.5000	78.27840	1420.855	334350.6				
220.5000				1.304129	4.399812	258598.9	0.4468750E-01
220.5000				1.304129	4.419811	258598.9	0.4468750E-01
221.0000				1.309622		258615.3	
221.5000	78.18614	1420.018	335770.6				
221.5000				1.309560	4.419811	258615.3	0.4455249E-01
221.5000				1.309560	4.439811	258615.3	0.4455249E-01
222.0000				1.315049		258641.6	
222.5000	78.09395	1419.180	337189.7				
222.5000				1.314987	4.439811	258641.6	0.4443749E-01
222.5000				1.314987	4.459810	258641.6	0.4443749E-01
223.0000				1.320474		258667.9	
223.5000	78.00180	1418.344	338508.0				
223.5000				1.320412	4.459810	258667.9	0.4431250E-01
223.5000				1.320412	4.479810	258667.9	0.4431250E-01
224.0000				1.325894		258694.1	
224.5000	77.90971	1417.507	340025.5				
224.5000				1.325832	4.479810	258694.1	0.4418750E-01
224.5000				1.325832	4.499809	258694.1	0.4418750E-01
225.0000				1.331311		258720.4	
225.5000	77.81767	1416.669	341442.1				
225.5000				1.331249	4.499809	258720.4	0.4406249E-01
225.5000				1.331249	4.519809	258720.4	0.4406249E-01
226.0000				1.336724		258746.8	
226.5000	77.72569	1415.833	342857.9				
226.5000				1.336663	4.519809	258746.8	0.4393749E-01
226.5000				1.336663	4.539808	258746.8	0.4393749E-01
227.0000				1.342134		258772.3	
227.5000	77.63377	1414.996	344272.9				
227.5000				1.342073	4.539808	258772.8	0.4381249E-01
227.5000				1.342073	4.559808	258772.8	0.4381249E-01
228.0000				1.347541		258799.1	
228.5000	77.54190	1414.159	345687.0				
228.5000				1.347480	4.559808	258799.1	0.4368750E-01
228.5000				1.347480	4.579807	258799.1	0.4368750E-01
229.0000				1.352943		258825.4	
229.5000	77.45009	1413.322	347100.3				
229.5000				1.352882	4.579807	258825.4	0.4356249E-01
229.5000				1.352882	4.599807	258825.4	0.4356249E-01
230.0000				1.358342		258851.6	
230.5000	77.35832	1412.485	348512.8				
230.5000				1.358281	4.599807	258851.6	0.4343750E-01
230.5000				1.358281	4.619806	258851.6	0.4343750E-01
231.0000				1.363737		258877.7	
231.5000	77.26662	1411.648	349924.4				
231.5000				1.363675	4.619806	258877.7	0.4331250E-01
231.5000				1.363675	4.639806	258877.7	0.4331250E-01
232.0000				1.369123		258903.8	
232.5000	77.17496	1410.811	351335.1				
232.5000				1.369068	4.639806	258903.8	0.4318749E-01
232.5000				1.369068	4.659805	258903.8	0.4318749E-01

VAPOR REACHES TOP OF DIKE AT T = 3.856565 MIN

233.0000				1.374516		258929.8	

CONCENTRATION AT DOWNWIND POINT = 8.613422 PERCENT

14. APPENDIX G Discrete Process Program

14.1 Interrupt Case

```
*****************************************************************************
                          MODEL REPRESENTATION INPUT
*****************************************************************************
L     C2                  1        1
L     C1                  1        1
L     P5                  1        1
L     P4                  1        1
L     P3                  1        1
L     P2                  1        1
L     P1                  1        1
W     I01   C1            0        +
W     X01   C1            0        +
W     X02   C1            0        +
W     SEN2  C2            1        +
W     SEN1  C1            1        +
W     WIT2  C2            1        .
W     WIT1  C1            1        .
W     DUM1  C1            1        +
W     DUM2  C2            1        +
W     P25   P5            1        +
W     P24   P4            1        +
W     P23   P3            1        +
W     P22   P2            1        +
W     P21   P1            1        +
W     P15   P5            2        +
W     P14   P4            2        +
W     P13   P3            2        +
W     P12   P2            2        +
W     P11   P1            2        +
W     GEN2  C2            1        +
W     GEN1  C1            1        +
X     L01   I01   X01     1        0
X     L02   X01   X02     1        1        -1
X     L03   X02   X02     -1       1        -1
X     L04   X02   X01     -1       1        -1
X     L114  GEN1  WIT1    -1       1
X     L214  GEN2  WIT2    -1       1
X     L215  WIT2  SEN2    1        1        -1
X     L115  WIT1  SEN1    1        1        -1
X     L202  GEN2  GEN2    1        2
X     L102  GEN1  GEN1    1        2
X     L203  SEN2  P25     -1       1        -1
X     L103  SEN1  P15     -1       1        -1
X     L204  SEN2  P24     -1       1        -1
X     L104  SEN1  P14     -1       1        -1
X     L205  SEN2  P23     -1       1        -1
X     L105  SEN1  P13     -1       1        -1
X     L206  SEN2  P22     -1       1        -1
X     L106  SEN1  P12     -1       1        -1
X     L207  SEN2  P21     -1       1        -1
X     L107  SEN1  P11     -1       1        -1
X     L208  P25   DUM2    1        -1       -1
X     L209  P24   DUM2    1        -1       -1
X     L210  P23   DUM2    1        -1       -1
X     L211  P22   DUM2    1        -1       -1
X     L212  P21   DUM2    1        -1       -1
X     L213  DUM2  WIT2    1        1
X     L108  P15   DUM1    1        -1       -1
X     L109  P14   DUM1    1        -1       -1
X     L110  P13   DUM1    1        -1       -1
X     L111  P12   DUM1    1        -1       -1
X     L112  P11   DUM1    1        -1       -1
X     L113  DUM1  WIT1    1        1
./
I     I01
I     GEN2  L202
I     GEN1  L102
I     WIT2  L213
I     WIT1  L113
./
GEND
DETAIL
LIMIT 52
T     2000
```

INITIAL MODEL REPRESENTATION (PAGE 1)

	SUBSYSTEMS				SYSTEM-STATES					TRANSITIONS						
LINE	USER SYMBOL	RHO	DELTA	GAMMA	USER SYMBOL	ETA	MU	ALPHA	STATUS	USER SYMBOL	KAPPA	ETA(J): ETA	LINE	BETA	TAU	PHI
1	C2	1	1	1												
2					GEN2	20	1	+	IW							
3										L214	6	6	7	-1	1	0
4										L202	9	20	2	1	2	0
5					DUM2	9	1	+	IW							
6										L213	26	6	7	1	1	0
7					WIT2	6	1	.	IW							
8										L215	7	4	9	1	1	-1
9					SEN2	4	1	+	IW							
10										L203	11	10	39	-1	1	-1
11										L204	13	11	44	-1	1	-1
12										L205	15	12	49	-1	1	-1
13										L206	17	13	54	-1	1	-1
14										L207	19	14	59	-1	1	-1
15	C1	2	1	1												
16					X02	3	0	+	IW							
17										L03	3	3	16	-1	1	-1
18										L04	4	2	19	-1	1	-1
19					X01	2	0	+	IW							
20										L02	2	3	16	1	1	-1
21					I01	1	0	+	IW							
22										L01	1	2	19	1	0	0
23					GEN1	21	1	+	IW							
24										L116	5	7	28	-1	1	0
25										L102	10	21	23	1	2	0
26					DUM1	8	1	+	IW							
27										L113	32	7	23	1	1	0
28					WIT1	7	1	.	IW							
29										L115	8	5	30	1	1	-1
30					SEN1	5	1	+	IW							
31										L103	12	15	37	-1	1	-1
32										L104	14	16	42	-1	1	-1
33										L105	16	17	47	-1	1	-1
34										L106	18	18	52	-1	1	-1
35										L107	20	19	57	-1	1	-1
36	P5	3	1	1												
37					P15	15	2	+	IW							
38										L108	27	8	25	1	-1	-1
39					P25	10	1	+	IW							
40										L208	21	9	5	1	-1	-1
41	P4	4	1	1												
42					P14	16	2	+	IW							
43										L109	28	8	26	1	-1	-1
44					P24	11	1	+	IW							
45										L209	22	9	5	1	-1	-1
46	P3	5	1	1												
47					P13	17	2	+	IW							
48										L110	29	8	26	1	-1	-1
49					P23	12	1	+	IW							
50										L210	23	9	5	1	-1	-1
51	P2	6	1	1												

INITIAL MODEL REPRESENTATION (PAGE 2)

	SUBSYSTEMS				SYSTEM-STATES					TRANSITIONS						
LINE	USER SYMBOL	RHO	DELTA	GAMMA	USER SYMBOL	ETA	MU	ALPHA	STATUS	USER SYMBOL	KAPPA	ETA(J): ETA	LINE	BETA	TAU	PHI
52					P12	18	2	+	IW							
53										L111	30	8	25	1	-1	-1
54					P22	13	1	+	IW							
55										L211	24	9	5	1	-1	-1
56	P1	7	1	1												
57					P11	19	2	+	IW							
58										L112	31	8	25	1	-1	-1
59					P21	14	1	+	IW							
60										L212	25	9	5	1	-1	-1

SYMBOL LISTS

RHO	L-NAME	RHO	L-NAME	RHO	L-NAME	RHO	L-NAME
1	C2	3	P5	5	P3	7	P1
2	C1	4	P4	6	P2		

ETA	W-NAME	ETA	W-NAME	ETA	W-NAME	ETA	W-NAME
1	I01	7	WIT1	12	P23	17	P13
2	X01	8	DUM1	13	P22	18	P12
3	X02	9	DUM2	14	P21	19	P11
4	SEN2	10	P25	15	P15	20	SEN2
5	SEN1	11	P24	16	P14	21	SEN1
6	WIT2						

KAPPA	X-NAME	KAPPA	X-NAME	KAPPA	X-NAME	KAPPA	X-NAME
1	L01	9	L202	17	L206	25	L212
2	L02	10	L102	18	L105	26	L213
3	L03	11	L203	19	L207	27	L103
4	L04	12	L103	20	L107	28	L109
5	L114	13	L204	21	L208	29	L110
6	L214	14	L104	22	L209	30	L111
7	L215	15	L205	23	L210	31	L112
8	L115	16	L105	24	L211	32	L113

```
0001          SUBROUTINE BTP(BBBBB,TTTTT,YYYYY,*)
0002          IMPLICIT INTEGER*2(T),LOGICAL*1(B)
0003          INTEGER CT
0004          COMMON/TERM/CT
0005          COMMON/LAMBDA/LDELT(100),LQT(100)
0006          COMMON/BLK1/J032(4),J031(4),NPORT
             1   ,KI1,KI2,NS
             1  ,J15,J14,J13,J12,J11,J5,J4,J3,J2,J1
0007          DATA NPTR/6/
0008          INTEGER*2 XXXXX,YYYYY,ZZZZZ,L
0009          COMMON/CHI1/B(3000),T(1000),L(1000)
0010          ZZZZZ=YYYYY+180
0011          ZZZZZ=ZZZZZ-180
0012          GO TO (
             1        2003,2004,2005,2006,2011,2012,2013,2014,2015,2016
             1       ,2017,2018,2019,2020,4021,4022,4023,4024,4025,4027
             1       ,4028,4029,4030,4031,   2,   3,   4,   7,   8,  11
             1       ,  12,  13,  14,  15,  16,  17,  18,  19,  20,  21
             1       ,  22,  23,  24,  25,  27,  28,  29,  30,  31,  31
             1                                                        ),ZZZZZ
0013          RETURN 1
        C BL03
0014     2003 BBBBB= LQT(1).LT.150
0015          GO TO 99999
        C BL04
0016     2004 BBBBB= LQT(1).GE.150
0017          GO TO 99999
        C BL114
0018     2005 BBBBB= LQT(1).LE.100
0019          GO TO 99999
        C BL215
0020     2006 BBBBB= LQT(1).LE.100
0021          GO TO 99999
        C BL203
0022     2011 BBBBB= J082(3).EQ.5
0023          GO TO 99999
        C BL204
0024     2013 BBBBB= J082(3).EQ.4
0025          GO TO 99999
        C BL205
0026     2015 BBBBB= J082(3).EQ.3
0027          GO TO 99999
        C BL206
0028     2017 BBBBB= J082(3).EQ.2
0029          GO TO 99999
        C BL207
0030     2019 BBBBB= J082(3).EQ.1
0031          GO TO 99999
        C BL103
0032     2012 BBBBB= J081(3).EQ.5
0033          GO TO 99999
        C BL104
0034     2014 BBBBB= J081(3).EQ.4
0035          GO TO 99999
        C BL105
0036     2016 BBBBB= J081(3).EQ.3
0037          GO TO 99999
        C BL106
0038     2018 BBBBB= J081(3).EQ.2
0039          GO TO 99999
        C BL107
0040     2020 BBBBB= J081(3).EQ.1
0041          GO TO 99999
        C TL208
0042     4021 TTTTT= J5T
0043          GO TO 99999
        C TL209
0044     4022 TTTTT= J4T
0045          GO TO 99999
        C TL210
0046     4023 TTTTT= J3T
0047          GO TO 99999
        C TL211
0048     4024 TTTTT= J2T
```

```
0049              GO TO 99999
            C TL212
0050         4025 TTTTT= J1T
0051              GO TO 99999
            C TL108
0052         4027 TTTTT= J15T
0053              GO TO 99999
            C TL109
0054         4028 TTTTT= J14T
0055              GO TO 99999
            C TL110
0056         4029 TTTTT= J13T
0057              GO TO 99999
            C TL111
0058         4030 TTTTT= J12T
0059              GO TO 99999
            C TL112
0060         4031 TTTTT= J11T
0061              GO TO 99999
            C L02
0062             2 CONTINUE
0063              WRITE(NPTR,7001)NPORT
0064         7001 FORMAT('1',50X,'INTERRUPT USING',I2,' PORTS')
0065              WRITE(NPTR,7002)
0066         7002 FORMAT('0',12X,'TIME',18X,'COMPUTER 2',38X,'COMPUTER 1'//)
0067              GO TO 99999
            C L03
0068             3 CONTINUE
0069              GO TO 99999
            C L04
0070             4 CONTINUE
0071              LQT(1)=0
0072              LQT(2)=0
0073              LQT(3)=0
0074              LQT(4)=0
0075              LQT(5)=0
0076              LQT(6)=0
0077              LQT(7)=0
0078              NS=1220703125
0079              J15=0
0080              J14=0
0081              J13=0
0082              J12=0
0083              J11=0
0084              J5=0
0085              J4=0
0086              J3=0
0087              J2=0
0088              J1=0
0089              J15T=0
0090              J14T=0
0091              J13T=0
0092              J12T=0
0093              J11T=0
0094              J5T=0
0095              J4T=0
0096              J3T=0
0097              J2T=0
0098              J1T=0
0099              KI1=0
0100              KI2=0
0101              NPORT=NPORT-1
0102              IF(NPORT.EQ.0)CT=LQT(1)
0103              GO TO 99999
            C L215
0104             7 CONTINUE
0105              CALL CREAT2
0106              GO TO 99999
            C L203
0107            11 CONTINUE
0108              J5=J032(1)
0109              J5T=J032(4)
0110              NXX=5
0111              WRITE(NPTR,7006)LQT(1),J5,J5T,NXX
0112              GO TO 99999
            C L204
0113            13 CONTINUE
```

```
0114          J4=JOB2(1)
0115          J4T=JOB2(4)
0116          NXX=4
0117          WRITE(NPTR,7006)LQT(1),J4,J4T,NXX
0118          GO TO 99999
        C L205
0119       15 CONTINUE
0120          J3=JOB2(1)
0121          J3T=JOB2(4)
0122          NXX=3
0123          WRITE(NPTR,7006)LQT(1),J3,J3T,NXX
0124          GO TO 99999
        C L206
0125       17 CONTINUE
0126          J2=JOB2(1)
0127          J2T=JOB2(4)
0128          NXX=2
0129          WRITE(NPTR,7006)LQT(1),J2,J2T,NXX
0130          GO TO 99999
        C L207
0131       19 CONTINUE
0132          J1=JOB2(1)
0133          J1T=JOB2(4)
0134          NXX=1
0135          WRITE(NPTR,7006)LQT(1),J1,J1T,NXX
0136     7006 FORMAT(' ',12X,I3,10X,'JOB',I3,' OF DURATION',I3,' WANTS PORT',I3)
0137          GO TO 99999
        C L115
0138        8 CONTINUE
0139          CALL CREAT1
0140          GO TO 99999
        C L103
0141       12 CONTINUE
0142          J15=JOB1(1)
0143          J15T=JOB1(4)
0144          NXX=5
0145          WRITE(NPTR,7008)LQT(1),J15,J15T,NXX
0146          GO TO 99999
        C L104
0147       14 CONTINUE
0148          J14=JOB1(1)
0149          J14T=JOB1(4)
0150          NXX=4
0151          WRITE(NPTR,7008)LQT(1),J14,J14T,NXX
0152          GO TO 99999
        C L105
0153       16 CONTINUE
0154          J13=JOB1(1)
0155          J13T=JOB1(4)
0156          NXX=3
0157          WRITE(NPTR,7008)LQT(1),J13,J13T,NXX
0158          GO TO 99999
        C L106
0159       18 CONTINUE
0160          J12=JOB1(1)
0161          J12T=JOB1(4)
0162          NXX=2
0163          WRITE(NPTR,7008)LQT(1),J12,J12T,NXX
0164          GO TO 99999
        C L107
0165       20 CONTINUE
0166          J11=JOB1(1)
0167          J11T=JOB1(4)
0168          NXX=1
0169          WRITE(NPTR,7008)LQT(1),J11,J11T,NXX
0170     7008 FORMAT(' ',12X,I3,55X,'JOB',I3,' OF DURATION',I3,' WANTS PORT',I3)
0171          GO TO 99999
        C L108
0172       27 CONTINUE
0173          WRITE(NPTR,7009)LQT(1),J15
0174     7009 FORMAT(' ',12X,I3,55X,'JOB',I3,' RELEASES PORT')
0175          J15=0
0176          J15T=0
0177          GO TO 99999
```

```
C L109
   28 CONTINUE
      WRITE(NPTR,7009)LQT(1),J14
      J14=0
      J14T=0
      GO TO 99999
C L110
   29 CONTINUE
      WRITE(NPTR,7009)LQT(1),J13
      J13=0
      J13T=0
      GO TO 99999
C L111
   30 CONTINUE
      WRITE(NPTR,7009)LQT(1),J12
      J12=0
      J12T=0
      GO TO 99999
C L112
   31 CONTINUE
      WRITE(NPTR,7009)LQT(1),J11
      J11T=0
      J11=0
      GO TO 99999
C L208
   21 CONTINUE
      WRITE(NPTR,7007)LQT(1),J5
      J5=0
      J5T=0
      GO TO 99999
C L209
   22 CONTINUE
      WRITE(NPTR,7007)LQT(1),J4
      J4=0
      J4T=0
      GO TO 99999
C L210
   23 CONTINUE
      WRITE(NPTR,7007)LQT(1),J3
      J3=0
      J3T=0
      GO TO 99999
C L211
   24 CONTINUE
      WRITE(NPTR,7007)LQT(1),J2
      J2=0
      J2T=0
      GO TO 99999
C L212
   25 CONTINUE
      WRITE(NPTR,7007)LQT(1),J1
      J1=0
      J1T=0
 7007 FORMAT(' ',12X,I3,10X,'JOB',I3,' RELEASES PORT')
99999 RETURN
      END
```

```
0001          BLOCK DATA
0002          COMMON/BLK1/JOB2(4),JOB1(4),NPORT
             1   ,KI1,KI2,NS
             1  ,J15,J14,J13,J12,J11,J5,J4,J3,J2,J1
0003          DATA J15,J14,J13,J12,J11,J5,J4,J3,J2,J1 /0,0,0,0,0,0,0,0,0,0/
0004          DATA JOB2,JOB1,NPORT/4*0,4*0,5/
0005          DATA KI1,KI2,NS/0,0,1220703125/
0006          END
```

```
0001          SUBROUTINE CREAT1
0002          INTEGER CT
0003          COMMON/TERM/CT
0004          COMMON/LAMBDA/LDELT(100),LQT(100)
0005          COMMON/BLK1/JOB2(4),JOB1(4),NPORT
             1   ,KI1,KI2,NS
0006          XP=NPORT+0.99
0007          NPTR=6
0008        2 KI1=KI1+1
0009          JOB1(  1)=KI1
0010          JOB1(  2)=LQT(1)
0011          NSEED=NS
0012          CALL ATIME(1.01, XP  , 0.0, 20, VAL, NSEED)
0013          JOB1(  3)=VAL
0014          CALL ATIME( 6.0, 2.0, 0.0, 11, VAL,NSEED)
0015          IF(VAL.LE.1.)VAL=2.
0016          JOB1(  4)=VAL
0017          NS=NSEED
0018          RETURN
0019          END
```

```
0001          SUBROUTINE CREAT2
0002          INTEGER CT
0003          COMMON/TERM/CT
0004          COMMON/LAMBDA/LDELT(100),LQT(100)
0005          COMMON/BLK1/JOB2(4),JOB1(4),NPORT
             1   ,KI1,KI2,NS
0006          NPTR=6
0007          XP=NPORT+0.99
0008        2 KI2=KI2+1
0009          JOB2(  1)=KI2
0010          JOB2(  2)=LQT(1)
0011          NSEED=NS
0012          CALL ATIME(1.01, XP  , 0.0, 20, VAL, NSEED)
0013          JOB2(  3)=VAL
0014          CALL ATIME( 6.0, 2.0, 0.0, 11, VAL,NSEED)
0015          IF(VAL.LE.1.)VAL=2.
0016          JOB2(  4)=VAL
0017          NS=NSEED
0018          END
```

INTERRUPT USING 5 PORTS

TIME	COMPUTER 2	COMPUTER 1
3	JOB 1 OF DURATION 6 WANTS PORT 4	
3		JOB 1 OF DURATION 4 WANTS PORT 1
7		JOB 1 RELEASES PORT
9	JOB 1 RELEASES PORT	
11		JOB 2 OF DURATION 5 WANTS PORT 4
13	JOB 2 OF DURATION 6 WANTS PORT 4	
16		JOB 2 RELEASES PORT
19		JOB 3 OF DURATION 3 WANTS PORT 5
22		JOB 3 RELEASES PORT
22	JOB 2 RELEASES PORT	
25	JOB 3 OF DURATION 8 WANTS PORT 1	
25		JOB 4 OF DURATION 4 WANTS PORT 4
29		JOB 4 RELEASES PORT
33		JOB 5 OF DURATION 7 WANTS PORT 5
33	JOB 3 RELEASES PORT	
37	JOB 4 OF DURATION 5 WANTS PORT 4	
40		JOB 5 RELEASES PORT
42	JOB 4 RELEASES PORT	
43		JOB 6 OF DURATION 3 WANTS PORT 2
45	JOB 5 OF DURATION 4 WANTS PORT 4	
46		JOB 6 RELEASES PORT
49		JOB 7 OF DURATION 1 WANTS PORT 5
49	JOB 5 RELEASES PORT	
50		JOB 7 RELEASES PORT
53	JOB 6 OF DURATION 6 WANTS PORT 5	
53		JOB 8 OF DURATION 7 WANTS PORT 5
60		JOB 8 RELEASES PORT
63		JOB 9 OF DURATION 8 WANTS PORT 4
66	JOB 6 RELEASES PORT	
69	JOB 7 OF DURATION 8 WANTS PORT 1	
71		JOB 9 RELEASES PORT
75		JOB 10 OF DURATION 1 WANTS PORT 5
76		JOB 10 RELEASES PORT
77	JOB 7 RELEASES PORT	
79		JOB 11 OF DURATION 7 WANTS PORT 2
81	JOB 8 OF DURATION 6 WANTS PORT 1	
86		JOB 11 RELEASES PORT
87	JOB 8 RELEASES PORT	
89		JOB 12 OF DURATION 7 WANTS PORT 3
91	JOB 9 OF DURATION 2 WANTS PORT 5	
93	JOB 9 RELEASES PORT	
96		JOB 12 RELEASES PORT
97	JOB 10 OF DURATION 2 WANTS PORT 3	
99		JOB 13 OF DURATION 2 WANTS PORT 4
99	JOB 10 RELEASES PORT	
101		JOB 13 RELEASES PORT
103	JOB 11 OF DURATION 3 WANTS PORT 2	
106	JOB 11 RELEASES PORT	

INTERRUPT USING 4 PORTS

TIME	COMPUTER 2	COMPUTER 1
4	JOB 1 OF DURATION 6 WANTS PORT 3	
4		JOB 1 OF DURATION 4 WANTS PORT 1
8		JOB 1 RELEASES PORT
10	JOB 1 RELEASES PORT	
12		JOB 2 OF DURATION 5 WANTS PORT 3
14	JOB 2 OF DURATION 6 WANTS PORT 3	
17		JOB 2 RELEASES PORT
20		JOB 3 OF DURATION 3 WANTS PORT 4
23		JOB 3 RELEASES PORT
23	JOB 2 RELEASES PORT	
26	JOB 3 OF DURATION 8 WANTS PORT 1	
26		JOB 4 OF DURATION 4 WANTS PORT 4
30		JOB 4 RELEASES PORT
34		JOB 5 OF DURATION 7 WANTS PORT 4
34	JOB 3 RELEASES PORT	
38	JOB 4 OF DURATION 5 WANTS PORT 4	
41		JOB 5 RELEASES PORT
44		JOB 6 OF DURATION 3 WANTS PORT 2
46	JOB 4 RELEASES PORT	
47		JOB 6 RELEASES PORT
50	JOB 5 OF DURATION 4 WANTS PORT 4	
50		JOB 7 OF DURATION 1 WANTS PORT 4
51		JOB 7 RELEASES PORT
54		JOB 8 OF DURATION 6 WANTS PORT 4
60		JOB 8 RELEASES PORT
61	JOB 5 RELEASES PORT	
64	JOB 6 OF DURATION 7 WANTS PORT 4	
64		JOB 9 OF DURATION 8 WANTS PORT 3
71	JOB 6 RELEASES PORT	
72		JOB 9 RELEASES PORT
74	JOB 7 OF DURATION 8 WANTS PORT 1	
76		JOB 10 OF DURATION 1 WANTS PORT 4
77		JOB 10 RELEASES PORT
80		JOB 11 OF DURATION 7 WANTS PORT 1
87		JOB 11 RELEASES PORT
89	JOB 7 RELEASES PORT	
90		JOB 12 OF DURATION 6 WANTS PORT 1
92	JOB 8 OF DURATION 7 WANTS PORT 2	
96		JOB 12 RELEASES PORT
99	JOB 8 RELEASES PORT	
100		JOB 13 OF DURATION 2 WANTS PORT 4
102	JOB 9 OF DURATION 2 WANTS PORT 2	
102		JOB 13 RELEASES PORT
104	JOB 9 RELEASES PORT	

INTERRUPT USING 3 PORTS

TIME	COMPUTER 2	COMPUTER 1
3	JOB 1 OF DURATION 6 WANTS PORT 2	
3		JOB 1 OF DURATION 4 WANTS PORT 1
7		JOB 1 RELEASES PORT
9	JOB 1 RELEASES PORT	
11		JOB 2 OF DURATION 5 WANTS PORT 2
13	JOB 2 OF DURATION 6 WANTS PORT 3	
16		JOB 2 RELEASES PORT
19		JOB 3 OF DURATION 3 WANTS PORT 3
19	JOB 2 RELEASES PORT	
22		JOB 3 RELEASES PORT
23	JOB 3 OF DURATION 8 WANTS PORT 1	
25		JOB 4 OF DURATION 4 WANTS PORT 3
29		JOB 4 RELEASES PORT
31	JOB 3 RELEASES PORT	
33		JOB 5 OF DURATION 7 WANTS PORT 3
35	JOB 4 OF DURATION 5 WANTS PORT 3	
40		JOB 5 RELEASES PORT
43		JOB 6 OF DURATION 3 WANTS PORT 2
45	JOB 4 RELEASES PORT	
46		JOB 6 RELEASES PORT
49	JOB 5 OF DURATION 4 WANTS PORT 3	
49		JOB 7 OF DURATION 1 WANTS PORT 3
50		JOB 7 RELEASES PORT
53		JOB 8 OF DURATION 6 WANTS PORT 3
59		JOB 8 RELEASES PORT
60	JOB 5 RELEASES PORT	
63	JOB 6 OF DURATION 7 WANTS PORT 3	
63		JOB 9 OF DURATION 8 WANTS PORT 3
71		JOB 9 RELEASES PORT
73		JOB 10 OF DURATION 8 WANTS PORT 1
73	JOB 6 RELEASES PORT	
81	JOB 7 OF DURATION 1 WANTS PORT 3	
82	JOB 7 RELEASES PORT	
83		JOB 10 RELEASES PORT
85	JOB 8 OF DURATION 7 WANTS PORT 1	
87		JOB 11 OF DURATION 6 WANTS PORT 1
93		JOB 11 RELEASES PORT
97		JOB 12 OF DURATION 7 WANTS PORT 2
98	JOB 8 RELEASES PORT	
101	JOB 9 OF DURATION 2 WANTS PORT 3	
103	JOB 9 RELEASES PORT	
104		JOB 12 RELEASES PORT

INTERRUPT USING 2 PORTS

TIME	COMPUTER 2	COMPUTER 1
4	JOB 1 OF DURATION 6 WANTS PORT 2	
4		JOB 1 OF DURATION 4 WANTS PORT 1
8		JOB 1 RELEASES PORT
10	JOB 1 RELEASES PORT	
12		JOB 2 OF DURATION 5 WANTS PORT 2
14	JOB 2 OF DURATION 6 WANTS PORT 2	
17		JOB 2 RELEASES PORT
20		JOB 3 OF DURATION 3 WANTS PORT 2
23		JOB 3 RELEASES PORT
25		JOB 4 OF DURATION 8 WANTS PORT 1
26	JOB 2 RELEASES PORT	
30	JOB 3 OF DURATION 4 WANTS PORT 2	
34	JOB 3 RELEASES PORT	
34		JOB 4 RELEASES PORT
38	JOB 4 OF DURATION 7 WANTS PORT 2	
38		JOB 5 OF DURATION 5 WANTS PORT 2
43		JOB 5 RELEASES PORT
45		JOB 6 OF DURATION 3 WANTS PORT 1
49		JOB 6 RELEASES PORT
50	JOB 4 RELEASES PORT	
52		JOB 7 OF DURATION 4 WANTS PORT 2
54	JOB 5 OF DURATION 1 WANTS PORT 2	
56		JOB 7 RELEASES PORT
57	JOB 5 RELEASES PORT	
60	JOB 6 OF DURATION 6 WANTS PORT 2	
60		JOB 8 OF DURATION 7 WANTS PORT 2
67		JOB 8 RELEASES PORT
70		JOB 9 OF DURATION 8 WANTS PORT 2
73		JOB 9 RELEASES PORT
81	JOB 6 RELEASES PORT	
82		JOB 10 OF DURATION 8 WANTS PORT 1
84	JOB 7 OF DURATION 1 WANTS PORT 2	
85	JOB 7 RELEASES PORT	
88	JOB 8 OF DURATION 7 WANTS PORT 1	
90		JOB 10 RELEASES PORT
94		JOB 11 OF DURATION 6 WANTS PORT 1
100		JOB 11 RELEASES PORT
103	JOB 8 RELEASES PORT	

INTERRUPT USING 1 PORT

TIME	COMPUTER 2	COMPUTER 1
3	JOB 1 OF DURATION 6 WANTS PORT 1	
3		JOB 1 OF DURATION 4 WANTS PORT 1
7		JOB 1 RELEASES PORT
11		JOB 2 OF DURATION 5 WANTS PORT 1
16		JOB 2 RELEASES PORT
18	JOB 1 RELEASES PORT	
19		JOB 3 OF DURATION 5 WANTS PORT 1
21	JOB 2 OF DURATION 3 WANTS PORT 1	
25		JOB 3 RELEASES PORT
28	JOB 2 RELEASES PORT	
29		JOB 4 OF DURATION 8 WANTS PORT 1
31	JOB 3 OF DURATION 4 WANTS PORT 1	
37		JOB 4 RELEASES PORT
41		JOB 5 OF DURATION 7 WANTS PORT 1
41	JOB 3 RELEASES PORT	
45	JOB 4 OF DURATION 5 WANTS PORT 1	
48		JOB 5 RELEASES PORT
51		JOB 6 OF DURATION 3 WANTS PORT 1
54		JOB 6 RELEASES PORT
56	JOB 4 RELEASES PORT	
57		JOB 7 OF DURATION 4 WANTS PORT 1
59	JOB 5 OF DURATION 1 WANTS PORT 1	
61		JOB 7 RELEASES PORT
62	JOB 5 RELEASES PORT	
65	JOB 6 OF DURATION 6 WANTS PORT 1	
65		JOB 8 OF DURATION 7 WANTS PORT 1
72		JOB 8 RELEASES PORT
75		JOB 9 OF DURATION 8 WANTS PORT 1
83		JOB 9 RELEASES PORT
85	JOB 6 RELEASES PORT	
87		JOB 10 OF DURATION 8 WANTS PORT 1
89	JOB 7 OF DURATION 1 WANTS PORT 1	
95		JOB 10 RELEASES PORT
96	JOB 7 RELEASES PORT	
99	JOB 8 OF DURATION 7 WANTS PORT 1	
99		JOB 11 OF DURATION 6 WANTS PORT 1
105		JOB 11 RELEASES PORT
112	JOB 8 RELEASES PORT	

*** END OF MODEL CYCLING ***

14.2 Interlock Case

```
*****************************************************************************
                          MODEL REPRESENTATION INPUT
*****************************************************************************
L     C2                  1       1
L     C1                  1       1
L     P5                  1       2
L     P4                  1       2
L     P3                  1       2
L     P2                  1       2
L     P1                  1       2
W     I01   C1            0       +
W     X01   C1            0       +
W     X02   C1            0       +
W     SEN2  C2            1       +
W     SEN1  C1            1       +
W     WIT2  C2            1       -
W     WIT1  C1            1       -
W     DUM1  C1            1       +
W     DUM2  C2            1       +
W     P25   P5            1       +
W     P24   P4            1       +
W     P23   P3            1       +
W     P22   P2            1       +
W     P21   P1            1       +
W     P15   P5            1       +
W     P14   P4            1       +
W     P13   P3            1       +
W     P12   P2            1       +
W     P11   P1            1       +
W     GEN2  C2            1       +
W     GEN1  C1            1       +
X     L01   I01   X01     1       0
X     L02   X01   X02     1       1       -1
X     L03   X02   X02     -1      1       -1
X     L04   X02   X01     -1      1       -1
X     L214  GEN2  WIT2    -1      1
X     L114  GEN1  WIT1    -1      1
X     L215  WIT2  SEN2    1       1       -1
X     L115  WIT1  SEN1    1       1       -1
X     L202  GEN2  GEN2    1       2
X     L102  GEN1  GEN1    1       2
X     L203  SEN2  P25     -1      1       -1
X     L103  SEN1  P15     -1      1       -1
X     L204  SEN2  P24     -1      1       -1
X     L104  SEN1  P14     -1      1       -1
X     L205  SEN2  P23     -1      1       -1
X     L105  SEN1  P13     -1      1       -1
X     L206  SEN2  P22     -1      1       -1
X     L106  SEN1  P12     -1      1       -1
X     L207  SEN2  P21     -1      1       -1
X     L107  SEN1  P11     -1      1       -1
X     L208  P25   DUM2    1       -1      -1
X     L209  P24   DUM2    1       -1      -1
X     L210  P23   DUM2    1       -1      -1
X     L211  P22   DUM2    1       -1      -1
X     L212  P21   DUM2    1       -1      -1
X     L213  DUM2  WIT2    1       1
X     L108  P15   DUM1    1       -1      -1
X     L109  P14   DUM1    1       -1      -1
X     L110  P13   DUM1    1       -1      -1
X     L111  P12   DUM1    1       -1      -1
X     L112  P11   DUM1    1       -1      -1
X     L113  DUM1  WIT1    1       1
./
I     I01
I     GEN2  L202
I     GEN1  L102
I     WIT2  L213
I     WIT1  L113
./
DPORP
DSYML
CMNTR C2
T     2000
```

INITIAL MODEL REPRESENTATION (PAGE 1)

	SUBSYSTEMS				SYSTEM-STATES					TRANSITIONS						
LINE	USER SYMBOL	RHO	DELTA	GAMMA	USER SYMBOL	ETA	MU	ALPHA	STATUS	USER SYMBOL	KAPPA	ETA(J): ETA	LINE	BETA	TAU	PHI
1	C2	1	1	1												
2					GEN2	20	1	+	IW							
3										L214	5	5	7	-1	1	0
4										L202	9	20	2	1	2	0
5					DJM2	9	1	+	IW							
6										L213	26	6	7	1	1	0
7					WIT2	6	1	-	IW							
8										L215	7	4	9	1	1	-1
9					SEN2	4	1	+	IW							
10										L203	11	10	39	-1	1	-1
11										L204	13	11	44	-1	1	-1
12										L205	15	12	49	-1	1	-1
13										L206	17	13	54	-1	1	-1
14										L207	19	14	59	-1	1	-1
15	C1	2	1	1												
16					X02	3	0	+	IW							
17										L03	3	3	15	-1	1	-1
18										L04	4	2	19	-1	1	-1
19					X01	2	0	+	IW							
20										L02	2	3	16	1	1	-1
21					I01	1	0	+	IW							
22										L01	1	2	19	1	0	0
23					GEN1	21	1	+	IW							
24										L114	6	7	29	-1	1	0
25										L102	10	21	23	1	2	0
26					DJM1	8	1	+	IW							
27										L113	32	7	28	1	1	0
28					WIT1	7	1	-	IW							
29										L115	8	5	30	1	1	-1
30					SEN1	5	1	+	IW							
31										L103	12	15	37	-1	1	-1
32										L104	14	16	42	-1	1	-1
33										L105	16	17	47	-1	1	-1
34										L106	18	18	52	-1	1	-1
35										L107	20	19	57	-1	1	-1
36	P5	3	1	2												
37					P15	15	1	+	IW							
38										L108	27	9	25	1	-1	-1
39					P25	10	1	+	IW							
40										L208	21	9	5	1	-1	-1
41	P4	4	1	2												
42					P14	16	1	+	IW							
43										L109	28	8	26	1	-1	-1
44					P24	11	1	+	IW							
45										L209	22	9	5	1	-1	-1
46	P3	5	1	2												
47					P13	17	1	+	IW							
48										L110	29	8	25	1	-1	-1
49					P23	12	1	+	IW							
50										L210	23	9	5	1	-1	-1
51	P2	6	1	2												

INITIAL MODEL REPRESENTATION (PAGE 2)

	SUBSYSTEMS				SYSTEM-STATES					TRANSITIONS						
LINE	USER SYMBOL	RHO	DELTA	GAMMA	USER SYMBOL	ETA	MU	ALPHA	STATUS	USER SYMBOL	KAPPA	ETA(J): ETA	LINE	BETA	TAU	PHI
52					P12	18	1	+	IW							
53										L111	30	8	26	1	-1	-1
54					P22	13	1	+	IW							
55										L211	24	9	5	1	-1	-1
56	P1	7	1	2												
57					P11	19	1	+	IW							
58										L112	31	8	25	1	-1	-1
59					P21	14	1	+	IW							
60										L212	25	9	5	1	-1	-1

SYMBOL LISTS

RHO	L-NAME	RHO	L-NAME	RHO	L-NAME	RHO	L-NAME
1	C2	3	P5	5	P3	7	P1
2	C1	4	P4	6	P2		

ETA	W-NAME	ETA	W-NAME	ETA	W-NAME	ETA	W-NAME
1	I01	7	WIT1	12	P23	17	P13
2	X01	8	DUM1	13	P22	18	P12
3	X02	9	DUM2	14	P21	19	P11
4	SEN2	10	P25	15	P15	20	GEN2
5	SEN1	11	P24	16	P14	21	GEN1
6	WIT2						

KAPPA	X-NAME	KAPPA	X-NAME	KAPPA	X-NAME	KAPPA	X-NAME
1	L01	9	L202	17	L206	25	L212
2	L02	10	L102	18	L106	26	L213
3	L03	11	L203	19	L207	27	L108
4	L04	12	L103	20	L107	28	L109
5	L214	13	L204	21	L208	29	L110
6	L114	14	L104	22	L209	30	L111
7	L215	15	L205	23	L210	31	L112
8	L115	16	L105	24	L211	32	L113

INTERLOCK USING 5 PORTS

TIME	COMPUTER 2	COMPUTER 1
3	JOB 1 OF DURATION 6 WANTS PORT 4	
3		JOB 1 OF DURATION 4 WANTS PORT 1
7		JOB 1 RELEASES PORT
9	JOB 1 RELEASES PORT	
11		JOB 2 OF DURATION 5 WANTS PORT 4
13	JOB 2 OF DURATION 6 WANTS PORT 4	
16		JOB 2 RELEASES PORT
19		JOB 3 OF DURATION 3 WANTS PORT 5
22		JOB 3 RELEASES PORT
22	JOB 2 RELEASES PORT	
25	JOB 3 OF DURATION 8 WANTS PORT 1	
25		JOB 4 OF DURATION 4 WANTS PORT 4
29		JOB 4 RELEASES PORT
33		JOB 5 OF DURATION 7 WANTS PORT 5
33	JOB 3 RELEASES PORT	
37	JOB 4 OF DURATION 5 WANTS PORT 4	
40		JOB 5 RELEASES PORT
42	JOB 4 RELEASES PORT	
43		JOB 6 OF DURATION 3 WANTS PORT 2
45	JOB 5 OF DURATION 4 WANTS PORT 4	
46		JOB 6 RELEASES PORT
49		JOB 7 OF DURATION 1 WANTS PORT 5
49	JOB 5 RELEASES PORT	
50		JOB 7 RELEASES PORT
53	JOB 6 OF DURATION 6 WANTS PORT 5	
53		JOB 8 OF DURATION 7 WANTS PORT 5
60		JOB 8 RELEASES PORT
63		JOB 9 OF DURATION 8 WANTS PORT 4
66	JOB 6 RELEASES PORT	
69	JOB 7 OF DURATION 8 WANTS PORT 1	
71		JOB 9 RELEASES PORT
75		JOB 10 OF DURATION 1 WANTS PORT 5
76		JOB 10 RELEASES PORT
77	JOB 7 RELEASES PORT	
79		JOB 11 OF DURATION 7 WANTS PORT 2
81	JOB 8 OF DURATION 6 WANTS PORT 1	
86		JOB 11 RELEASES PORT
87	JOB 8 RELEASES PORT	
89		JOB 12 OF DURATION 7 WANTS PORT 3
91	JOB 9 OF DURATION 2 WANTS PORT 5	
93	JOB 9 RELEASES PORT	
96		JOB 12 RELEASES PORT
97	JOB 10 OF DURATION 2 WANTS PORT 3	
99		JOB 13 OF DURATION 2 WANTS PORT 4
99	JOB 10 RELEASES PORT	
101		JOB 13 RELEASES PORT
103	JOB 11 OF DURATION 3 WANTS PORT 2	
106	JOB 11 RELEASES PORT	

INTERLOCK USING 4 PORTS

TIME	COMPUTER 2	COMPUTER 1
4	JOB 1 OF DURATION 6 WANTS PORT 3	
4		JOB 1 OF DURATION 4 WANTS PORT 1
8		JOB 1 RELEASES PORT
10	JOB 1 RELEASES PORT	
12		JOB 2 OF DURATION 5 WANTS PORT 3
14	JOB 2 OF DURATION 6 WANTS PORT 3	
17		JOB 2 RELEASES PORT
20		JOB 3 OF DURATION 3 WANTS PORT 4
23		JOB 3 RELEASES PORT
23	JOB 2 RELEASES PORT	
26	JOB 3 OF DURATION 8 WANTS PORT 1	
26		JOB 4 OF DURATION 4 WANTS PORT 4
30		JOB 4 RELEASES PORT
34		JOB 5 OF DURATION 7 WANTS PORT 4
34	JOB 3 RELEASES PORT	
38	JOB 4 OF DURATION 5 WANTS PORT 4	
41		JOB 5 RELEASES PORT
44		JOB 6 OF DURATION 3 WANTS PORT 2
46	JOB 4 RELEASES PORT	
47		JOB 6 RELEASES PORT
50	JOB 5 OF DURATION 4 WANTS PORT 4	
50		JOB 7 OF DURATION 1 WANTS PORT 4
51		JOB 7 RELEASES PORT
54		JOB 8 OF DURATION 5 WANTS PORT 4
55	JOB 5 RELEASES PORT	
58	JOB 6 OF DURATION 7 WANTS PORT 4	
61		JOB 8 RELEASES PORT
64		JOB 9 OF DURATION 8 WANTS PORT 3
68	JOB 6 RELEASES PORT	
72	JOB 7 OF DURATION 8 WANTS PORT 1	
72		JOB 9 RELEASES PORT
76		JOB 10 OF DURATION 1 WANTS PORT 4
77		JOB 10 RELEASES PORT
80		JOB 11 OF DURATION 7 WANTS PORT 1
80	JOB 7 RELEASES PORT	
84	JOB 8 OF DURATION 6 WANTS PORT 1	
87		JOB 11 RELEASES PORT
90		JOB 12 OF DURATION 7 WANTS PORT 2
93	JOB 8 RELEASES PORT	
96	JOB 9 OF DURATION 2 WANTS PORT 4	
97		JOB 12 RELEASES PORT
98	JOB 9 RELEASES PORT	
100		JOB 13 OF DURATION 2 WANTS PORT 2
102	JOB 10 OF DURATION 2 WANTS PORT 3	
102		JOB 13 RELEASES PORT
104	JOB 10 RELEASES PORT	

INTERLOCK USING 3 PORTS

TIME	COMPUTER 2	COMPUTER 1
3	JOB 1 OF DURATION 6 WANTS PORT 2	
3		JOB 1 OF DURATION 4 WANTS PORT 1
7		JOB 1 RELEASES PORT
9	JOB 1 RELEASES PORT	
11		JOB 2 OF DURATION 5 WANTS PORT 2
13	JOB 2 OF DURATION 6 WANTS PORT 3	
16		JOB 2 RELEASES PORT
19		JOB 3 OF DURATION 3 WANTS PORT 3
19	JOB 2 RELEASES PORT	
22		JOB 3 RELEASES PORT
23	JOB 3 OF DURATION 8 WANTS PORT 1	
25		JOB 4 OF DURATION 4 WANTS PORT 3
29		JOB 4 RELEASES PORT
31	JOB 3 RELEASES PORT	
33		JOB 5 OF DURATION 7 WANTS PORT 3
35	JOB 4 OF DURATION 5 WANTS PORT 3	
40		JOB 5 RELEASES PORT
43		JOB 6 OF DURATION 3 WANTS PORT 2
45	JOB 4 RELEASES PORT	
46		JOB 6 RELEASES PORT
49	JOB 5 OF DURATION 4 WANTS PORT 3	
49		JOB 7 OF DURATION 1 WANTS PORT 3
50		JOB 7 RELEASES PORT
53		JOB 8 OF DURATION 5 WANTS PORT 3
54	JOB 5 RELEASES PORT	
57	JOB 6 OF DURATION 7 WANTS PORT 3	
60		JOB 8 RELEASES PORT
63		JOB 9 OF DURATION 8 WANTS PORT 3
67	JOB 6 RELEASES PORT	
71	JOB 7 OF DURATION 8 WANTS PORT 1	
75		JOB 9 RELEASES PORT
79		JOB 10 OF DURATION 1 WANTS PORT 3
79	JOB 7 RELEASES PORT	
80		JOB 10 RELEASES PORT
83	JOB 8 OF DURATION 7 WANTS PORT 1	
83		JOB 11 OF DURATION 5 WANTS PORT 1
89		JOB 11 RELEASES PORT
93		JOB 12 OF DURATION 7 WANTS PORT 2
96	JOB 8 RELEASES PORT	
99	JOB 9 OF DURATION 2 WANTS PORT 3	
100		JOB 12 RELEASES PORT
101	JOB 9 RELEASES PORT	
103		JOB 13 OF DURATION 2 WANTS PORT 2
105		JOB 13 RELEASES PORT

INTERLOCK USING 2 PORTS

TIME	COMPUTER 2	COMPUTER 1
4	JOB 1 OF DURATION 6 WANTS PORT 2	
4		JOB 1 OF DURATION 4 WANTS PORT 1
8		JOB 1 RELEASES PORT
10	JOB 1 RELEASES PORT	
12		JOB 2 OF DURATION 5 WANTS PORT 2
14	JOB 2 OF DURATION 6 WANTS PORT 2	
17		JOB 2 RELEASES PORT
20		JOB 3 OF DURATION 3 WANTS PORT 2
23	JOB 2 RELEASES PORT	
26	JOB 3 OF DURATION 8 WANTS PORT 1	
26		JOB 3 RELEASES PORT
30		JOB 4 OF DURATION 4 WANTS PORT 2
34		JOB 4 RELEASES PORT
34	JOB 3 RELEASES PORT	
38	JOB 4 OF DURATION 7 WANTS PORT 2	
38		JOB 5 OF DURATION 5 WANTS PORT 2
43		JOB 5 RELEASES PORT
46		JOB 5 OF DURATION 3 WANTS PORT 1
49		JOB 6 RELEASES PORT
50	JOB 4 RELEASES PORT	
52		JOB 7 OF DURATION 4 WANTS PORT 2
54	JOB 5 OF DURATION 1 WANTS PORT 2	
56		JOB 7 RELEASES PORT
57	JOB 5 RELEASES PORT	
60	JOB 6 OF DURATION 6 WANTS PORT 2	
60		JOB 8 OF DURATION 7 WANTS PORT 2
67		JOB 8 RELEASES PORT
70		JOB 9 OF DURATION 8 WANTS PORT 2
73	JOB 6 RELEASES PORT	
76	JOB 7 OF DURATION 8 WANTS PORT 1	
81		JOB 9 RELEASES PORT
84		JOB 10 OF DURATION 1 WANTS PORT 2
84	JOB 7 RELEASES PORT	
85		JOB 10 RELEASES PORT
88	JOB 8 OF DURATION 7 WANTS PORT 1	
88		JOB 11 OF DURATION 6 WANTS PORT 1
94		JOB 11 RELEASES PORT
98		JOB 12 OF DURATION 7 WANTS PORT 1
101	JOB 8 RELEASES PORT	
108		JOB 12 RELEASES PORT

INTERLOCK USING 1 PORTS

TIME	COMPUTER 2	COMPUTER 1
3	JOB 1 OF DURATION 6 WANTS PORT 1	
3		JOB 1 OF DURATION 4 WANTS PORT 1
7		JOB 1 RELEASES PORT
11		JOB 2 OF DURATION 5 WANTS PORT 1
13	JOB 1 RELEASES PORT	
17	JOB 2 OF DURATION 5 WANTS PORT 1	
18		JOB 2 RELEASES PORT
21		JOB 3 OF DURATION 3 WANTS PORT 1
24	JOB 2 RELEASES PORT	
27	JOB 3 OF DURATION 8 WANTS PORT 1	
27		JOB 3 RELEASES PORT
31		JOB 4 OF DURATION 4 WANTS PORT 1
35	JOB 3 RELEASES PORT	
39	JOB 4 OF DURATION 7 WANTS PORT 1	
39		JOB 4 RELEASES PORT
43		JOB 5 OF DURATION 5 WANTS PORT 1
46	JOB 4 RELEASES PORT	
49	JOB 5 OF DURATION 3 WANTS PORT 1	
51		JOB 5 RELEASES PORT
54	JOB 5 RELEASES PORT	
55		JOB 5 OF DURATION 4 WANTS PORT 1
57	JOB 6 OF DURATION 1 WANTS PORT 1	
59		JOB 5 RELEASES PORT
60	JOB 6 RELEASES PORT	
63	JOB 7 OF DURATION 6 WANTS PORT 1	
63		JOB 7 OF DURATION 7 WANTS PORT 1
70		JOB 7 RELEASES PORT
73		JOB 8 OF DURATION 8 WANTS PORT 1
76	JOB 7 RELEASES PORT	
79	JOB 8 OF DURATION 3 WANTS PORT 1	
84		JOB 8 RELEASES PORT
87		JOB 9 OF DURATION 1 WANTS PORT 1
92	JOB 8 RELEASES PORT	
93		JOB 9 RELEASES PORT
95	JOB 9 OF DURATION 7 WANTS PORT 1	
97		JOB 10 OF DURATION 5 WANTS PORT 1
102	JOB 9 RELEASES PORT	
108		JOB 10 RELEASES PORT

*** END OF MODEL CYCLING ***

15. APPENDIX H Queueing System Program

```
*****************************************************************************
                          MODEL REPRESENTATION INPUT
*****************************************************************************
L     GEN                 1       1
L     Q1                  1       1
L     Q2                  1       1
L     STA1                1       1
L     STA2                1       1
W     I01   GEN           0       +
W     G01   GEN           1       +
W     Q101  Q1            0       +
W     Q102  Q1            0       +
W     Q103  Q1            0       +
W     Q104  Q1            0       +
W     Q105  Q1            1       +
W     Q106  Q1            1       +
W     Q107  Q1            0       +
W     Q108  Q1            0       +
W     Q109  Q1            2       +
W     Q110  Q1            1       +
W     Q111  Q1            2       +
W     Q112  Q1            1       +
W     Q113  Q1            2       +
W     Q114  Q1            1       +
W     Q115  Q1            2       +
W     Q116  Q1            1       +
W     Q117  Q1            2       +
W     Q118  Q1            1       +
W     Q119  Q1            2       +
W     Q120  Q1            1       +
W     Q201  Q2            1       +
W     Q202  Q2            1       +
W     Q203  Q2            1       +
W     Q204  Q2            1       +
W     Q205  Q2            1       +
W     Q206  Q2            1       +
W     S151  STA1          5       +
W     S152  STA1          5       +
W     S153  STA1          5       +
W     S154  STA1          5       +
W     S141  STA1          4       +
W     S142  STA1          4       +
W     S143  STA1          4       +
W     S144  STA1          4       +
W     S131  STA1          3       +
W     S132  STA1          3       +
W     S133  STA1          3       +
W     S134  STA1          3       +
W     S121  STA1          2       +
W     S122  STA1          2       +
W     S123  STA1          2       +
W     S124  STA1          2       +
W     S111  STA1          1       +
W     S112  STA1          1       +
W     S113  STA1          1       +
W     S114  STA1          1       +
W     S101  STA1          0       +
W     S102  STA1          0       +
W     S103  STA1          0       +
W     S145  STA1          4       +
W     S135  STA1          3       +
W     S125  STA1          2       +
W     S146  STA1          4       +
W     S136  STA1          3       +
W     S126  STA1          2       +
W     S155  STA1          5       .
W     S156  STA1          5       +
W     S201  STA2          1       +
W     S202  STA2          1       +
W     S203  STA2          1       +
X     L01   I01   G01     1       0
X     L02   G01   G01     -1      -1      -1
X     L03   G01   Q116    -1      1       -1
X     L04   G01   Q118    -1      1       -1
X     L05   G01   Q120    -1      1       -1
X     L06   G01   Q201    -1      1       -1
X     L07   Q201  Q202    1       1
X     L08   Q203  Q204    1       1       -1
X     L09   Q205  Q206    -1      1
```

X	L10	Q205	Q206	-1	1	-1
X	L11	Q206	Q205	1	1	
X	L12	S201	S201	-1	1	
X	L13	S201	S202	-1	1	-1
X	L14	S202	S201	1	-1	
X	L15	S202	S203	-1	-1	-1
X	L16	S202	Q115	-1	-1	-1
X	L17	S202	Q117	-1	-1	-1
X	L18	S202	Q119	-1	-1	-1
X	L19	Q101	Q102	1	2	-1
X	L20	Q102	Q103	1	2	-1
X	L21	Q103	Q101	1	2	-1
X	L22	Q101	Q104	-1	2	-1
X	L23	Q102	Q104	-1	2	-1
X	L24	Q103	Q104	-1	2	-1
X	L25	Q104	Q107	1	1	-1
X	L26	Q105	S155	-1	1	-1
X	L27	Q105	Q106	-1	1	
X	L28	Q107	S141	-1	1	-1
X	L29	Q107	Q108	-1	1	
X	L30	Q115	Q109	1	1	
X	L31	Q116	Q109	1	1	
X	L32	Q109	S131	-1	1	-1
X	L33	Q109	Q110	-1	1	
X	L34	Q117	Q111	1	1	
X	L35	Q118	Q111	1	1	
X	L36	Q111	S121	-1	1	-1
X	L37	Q111	Q112	-1	1	
X	L38	Q119	Q113	1	1	
X	L39	Q120	Q113	1	1	
X	L40	Q113	S111	-1	1	-1
X	L41	Q113	Q114	-1	1	
X	L542	S153	S151	1	-1	
X	L442	S143	S141	1	-1	
X	L342	S133	S131	1	-1	
X	L242	S123	S121	1	-1	
X	L142	S113	S111	1	-1	
X	L143	S111	S113	-1	1	-1
X	L243	S121	S123	-1	1	-1
X	L343	S131	S133	-1	1	-1
X	L443	S141	S143	-1	1	-1
X	L543	S151	S153	-1	1	-1
X	L144	S111	S112	-1	1	-1
X	L244	S121	S122	-1	1	-1
X	L344	S131	S132	-1	1	-1
X	L444	S141	S142	-1	1	-1
X	L544	S151	S152	-1	1	-1
X	L545	S153	S154	-1	-1	-1
X	L445	S143	S144	-1	-1	-1
X	L345	S133	S134	-1	-1	-1
X	L245	S123	S124	-1	-1	-1
X	L145	S113	S114	-1	-1	-1
X	L546	S153	Q203	-1	-1	-1
X	L446	S143	Q203	-1	-1	-1
X	L346	S133	Q203	-1	-1	-1
X	L246	S123	Q203	-1	-1	-1
X	L146	S113	Q203	-1	-1	-1
X	L547	S151	S111	-1	1	-1
X	L548	S151	S121	-1	1	-1
X	L549	S151	S131	-1	1	-1
X	L042	S103	S101	1	1	
X	L043	S101	S102	1	1	
X	L044	S101	S126	-1	1	
X	L045	S102	S103	1	1	
X	L046	S102	S136	-1	1	
X	L047	S103	S146	-1	1	
X	L447	S146	S145	-1	1	
X	L347	S136	S135	-1	1	
X	L247	S126	S125	-1	1	
X	L448	S146	S156	-1	1	
X	L348	S136	S156	-1	1	
X	L248	S126	S156	-1	1	
X	L449	S146	Q105	-1	1	-1
X	L349	S136	Q105	-1	1	-1
X	L249	S126	Q105	-1	1	-1
X	L550	S156	S155	1	1	
X	L551	S155	S151	1	1	

```
./
I     I01
I     S101  L042
I     Q101  L21
I     Q205  L09
I     S201  L12
./
OMORP
OSYML
OMNTR GEN
OMNTR Q1
OMNTR Q2
OMNTR STA1
OMNTR STA2
OSACT
T     300
```

INITIAL MODEL REPRESENTATION (PAGE 1)

	SUBSYSTEMS					SYSTEM-STATES					TRANSITIONS						
LINE	USER SYMBOL	RHO	DELTA	GAMMA		USER SYMBOL	ETA	MU	ALPHA	STATUS	USER SYMBOL	ETA(J): KAPPA	ETA	LINE	BETA	TAU	PHI
1	GEN	1	1	1													
2						I01	1	0	+	IW							
3											L01	1	2	4	1	0	0
4						G01	2	1	+	IW							
5											L02	2	2	4	-1	-1	-1
6											L03	3	13	45	-1	1	-1
7											L04	4	20	43	-1	1	-1
8											L05	5	22	41	-1	1	-1
9											L06	6	23	64	-1	1	-1
10	Q1	2	1	1													
11						Q108	10	0	+	X							
12						Q107	9	0	+	IW							
13											L28	23	33	103	-1	1	-1
14											L29	29	10	11	-1	1	0
15						Q104	6	0	+	IW							
16											L25	25	9	12	1	1	-1
17						Q103	5	0	+	IW							
18											L21	21	3	23	1	2	-1
19											L24	24	6	15	-1	2	-1
20						Q102	4	0	+	IW							
21											L20	20	5	17	1	2	-1
22											L23	23	6	15	-1	2	-1
23						Q101	3	0	+	IW							
24											L19	19	4	20	1	2	-1
25											L22	22	6	15	-1	2	-1
26						Q119	21	2	+	IW							
27											L38	38	15	32	1	1	0
28						Q117	19	2	+	IW							
29											L34	34	13	35	1	1	0
30						Q115	17	2	+	IW							
31											L30	30	11	38	1	1	0
32						Q113	15	2	+	IW							
33											L40	40	45	140	-1	1	-1
34											L41	41	16	47	-1	1	0
35						Q111	13	2	+	IW							
36											L36	36	41	131	-1	1	-1
37											L37	37	14	48	-1	1	0
38						Q109	11	2	+	IW							
39											L32	32	37	117	-1	1	-1
40											L33	33	12	49	-1	1	0
41						Q120	22	1	+	IW							
42											L39	39	15	32	1	1	0
43						Q118	20	1	+	IW							
44											L35	35	13	35	1	1	0
45						Q116	18	1	+	IW							
46											L31	31	11	38	1	1	0
47						Q114	16	1	+	X							
48						Q112	14	1	+	X							
49						Q110	12	1	+	X							
50						Q106	8	1	+	X							
51						Q105	7	1	+	IW							

INITIAL MODEL REPRESENTATION (PAGE 2)

	SUBSYSTEMS				SYSTEM-STATES					TRANSITIONS						
LINE	USER SYMBOL	RHO	DELTA	GAMMA	USER SYMBOL	ETA	MU	ALPHA	STATUS	USER SYMBOL	KAPPA	ETA(J): ETA	LINE	BETA	TAU	PHI
52										L26	26	58	78	-1	1	-1
53										L27	27	8	50	-1	1	0
54	Q2	3	1	1												
55					Q206	28	1	+	IW							
56										L11	11	27	57	1	1	0
57					Q205	27	1	+	IW							
58										L09	9	27	57	-1	1	0
59										L10	10	28	55	-1	1	-1
60					Q204	26	1	+	X							
61					Q203	25	1	+	IW							
62										L08	8	26	50	1	1	-1
63					Q202	24	1	+	X							
64					Q201	23	1	+	IW							
65										L07	7	24	63	1	1	0
66	STA1	4	1	1												
67					S103	51	0	+	IW							
68										L042	70	49	73	1	1	0
69										L047	75	55	92	-1	1	0
70					S102	50	0	+	IW							
71										L045	73	51	67	1	1	0
72										L046	74	56	105	-1	1	0
73					S101	49	0	+	IW							
74										L043	71	50	70	1	1	0
75										L044	72	57	120	-1	1	0
76					S156	59	5	+	IW							
77										L550	85	58	73	1	1	0
78					S155	58	5	+	IW							
79										L551	85	29	85	1	1	0
80					S154	32	5	+	X							
81					S153	31	5	+	IW							
82										L542	42	29	86	1	-1	0
83										L545	57	32	83	-1	-1	-1
84										L546	62	25	51	-1	-1	-1
85					S152	30	5	+	X							
86					S151	29	5	+	IW							
87										L543	51	31	81	-1	1	-1
88										L544	55	30	85	-1	1	-1
89										L547	57	45	140	-1	1	-1
90										L548	68	41	131	-1	1	-1
91										L549	69	37	117	-1	1	-1
92					S146	55	4	+	IW							
93										L447	75	52	95	-1	1	0
94										L448	79	59	75	-1	1	0
95										L449	82	7	51	-1	1	-1
96					S145	52	4	+	X							
97					S144	36	4	+	X							
98					S143	35	4	+	IW							
99										L442	43	33	103	1	-1	0
100										L445	58	35	97	-1	-1	-1
101										L446	53	25	51	-1	-1	-1
102					S142	34	4	+	X							
103					S141	33	4	+	IW							
104										L443	50	35	98	-1	1	-1
105										L444	55	34	102	-1	1	-1
106					S136	56	3	+	IW							
107										L347	77	53	110	-1	1	0
108										L348	80	59	76	-1	1	0
109										L349	83	7	51	-1	1	-1
110					S135	53	3	+	X							
111					S134	40	3	+	X							
112					S133	39	3	+	IW							
113										L342	44	37	117	1	-1	0
114										L345	59	40	111	-1	-1	-1
115										L346	54	25	61	-1	-1	-1
116					S132	38	3	+	X							
117					S131	37	3	+	IW							
118										L343	49	39	112	-1	1	-1
119										L344	54	33	115	-1	1	-1
120					S126	57	2	+	IW							
121										L247	73	54	124	-1	1	0
122										L248	81	59	76	-1	1	0
123										L249	84	7	51	-1	1	-1
124					S125	54	2	+	X							
125					S124	44	2	+	X							
126					S123	43	2	+	IW							
127										L242	45	41	131	1	-1	0
128										L245	50	44	125	-1	-1	-1
129										L246	55	25	61	-1	-1	-1
130					S122	42	2	+	X							
131					S121	41	2	+	IW							
132										L243	43	43	135	-1	1	-1
133										L244	35	42	155	-1	1	-1

134						S114	48	1	+	X							
135						S113	47	1	+	IW							
136											L142	46	45	140	1	-1	0
137											L145	51	48	134	-1	-1	-1
138											L146	56	25	61	-1	-1	-1
139						S112	46	1	+	X							
140						S111	45	1	+	IW							
141											L143	47	47	135	-1	1	-1
142											L144	52	46	139	-1	1	-1
143	STA2	5	1	1													
144						S203	62	1	+	X							
145						S202	61	1	+	IW							
146											L14	14	60	151	1	-1	0
147											L15	15	62	144	-1	-1	-1
148											L16	16	17	30	-1	-1	-1
149											L17	17	19	28	-1	-1	-1
150											L18	18	21	26	-1	-1	-1
151						S201	60	1	+	IW							
152											L12	12	60	151	-1	1	0
153											L13	13	61	145	-1	1	-1

SYMBOL LISTS

RHO	L-NAME	RHO	L-NAME	RHO	L-NAME	RHO	L-NAME
1	GEN	3	Q2	4	STA1	5	STA2
2	Q1						

ETA	W-NAME	ETA	W-NAME	ETA	W-NAME	ETA	W-NAME
1	I01	17	Q115	33	S141	48	S114
2	G01	18	Q116	34	S142	49	S131
3	Q101	19	Q117	35	S143	50	S132
4	Q102	20	Q118	36	S144	51	S133
5	Q103	21	Q119	37	S131	52	S145
6	Q104	22	Q120	38	S132	53	S135
7	Q105	23	Q201	39	S133	54	S125
8	Q106	24	Q202	40	S134	55	S146
9	Q107	25	Q203	41	S121	56	S136
10	Q108	26	Q204	42	S122	57	S126
11	Q109	27	Q205	43	S123	58	S155
12	Q110	28	Q206	44	S124	59	S156
13	Q111	29	S151	45	S111	60	S201
14	Q112	30	S152	46	S112	61	S202
15	Q113	31	S153	47	S113	62	S203
16	Q114	32	S154				

KAPPA	X-NAME	KAPPA	X-NAME	KAPPA	X-NAME	KAPPA	X-NAME
1	L01	23	L23	45	L242	66	L146
2	L02	24	L24	46	L142	67	L547
3	L03	25	L25	47	L143	68	L548
4	L04	26	L26	48	L243	69	L549
5	L05	27	L27	49	L343	70	L042
6	L06	28	L28	50	L443	71	L043
7	L07	29	L29	51	L543	72	L044
8	L08	30	L30	52	L144	73	L045
9	L09	31	L31	53	L244	74	L046
10	L10	32	L32	54	L344	75	L047
11	L11	33	L33	55	L444	76	L447
12	L12	34	L34	56	L544	77	L347
13	L13	35	L35	57	L545	78	L247
14	L14	36	L36	58	L445	79	L448
15	L15	37	L37	59	L345	80	L348
16	L16	38	L38	60	L245	81	L248
17	L17	39	L39	61	L145	82	L449
18	L18	40	L40	62	L546	83	L349
19	L19	41	L41	63	L446	84	L249
20	L20	42	L542	64	L346	85	L533
21	L21	43	L442	65	L246	86	L531
22	L22	44	L342				

```
0001          SUBROUTINE BTP(88888,TTTTT,YYYYY,*)
0002          IMPLICIT INTEGER*2(T),LOGICAL*1(B)
0003          IMPLICIT INTEGER(Q)
0004          INTEGER CT
0005          COMMON/TERM/CT
0006          COMMON/LAMBDA/LDELT(100),LQT(100)
0007          COMMON /BLK2/ SW26,SW28,SW32,SW36,SW40
0008          COMMON/BLK1/
             1 JOB(20,15), Q2(10,3), Q15(10,2), Q14(10,2), Q13(10,2),
             1 Q12(10,2), Q11(10,2), J2, J2T, J15, J15T, J14, J14T, J13, J13T,
             1 J12, J12T, J11, J11T, JN, KIN, KOUT, NS, NPTR, INEW,
             1 I13, I12, I11,
             1 SW10, SW16, SW17, SW18, SW546, SW446, SW346, SW246, SW146,
             1  SW547, SW548, SW549, SW13
0009          LOGICAL SW26,SW28,SW32,SW36,SW40
0010          LOGICAL
             1 Q2AGE, GET2, LAST2, Q13AGE, Q12AGE, Q11AGE, LAST1, PR1AGE,
             1 PR2AGE, PR3AGE,
             1 SW10, SW16, SW17, SW18, SW546, SW446, SW346, SW246, SW146,
             1  SW547, SW548, SW549, SW13
0011          INTEGER*2 XXXXX,YYYYY,ZZZZZ,L
0012          COMMON/CHI1/B(3000),T(1000),L(1000)
0013          ZZZZZ=YYYYY+180
0014          ZZZZZ=ZZZZZ-180
0015          GO TO (
             1          2002,2003,2004,2005,2006,2009,2010,2012,2013,2015
             1         ,2016,2017,2018,2022,2023,2024,2025,2027,2028,2029
             1         ,2032,2033,2036,2037,2040,2041,2047,2048,2049,2050
             1         ,2051,2052,2053,2054,2055,2056,2057,2058,2059,2060
             1         ,2061,2062,2063,2064,2065,2066,2067,2068,2069,2072
             1         ,2074,2075,2076,2077,2078,2079,2080,2081,2082,2083
             1         ,2084,4002,4014,4015,4016,4017,4018,4042,4043,4044
             1         ,4045,4046,4057,4058,4059,4060,4061,4062,4063,4064
             1         ,4065,4066,   2,   3,   4,   5,   6,   8,  10,  13
             1         ,  15,  16,  17,  18,  19,  20,  21,  22,  23,  24
             1         ,  25,  26,  28,  32,  36,  40,  47,  48,  49,  50
             1         ,  51,  52,  53,  54,  55,  56,  57,  58,  59,  60
             1         ,  61,  62,  63,  64,  65,  66,  67,  68,  69,  82
             1         ,  83,  84,  84,  84,  84,  84,  84,  84,  84,  84
             1                                                          ),ZZZZZ
0016          RETURN 1
        C BL02
0017     2002 88888= LQT(1).LE.120
0018          GO TO 99999
        C BL03
0019     2003 88888= (JOB(INEW,6).EQ.1).AND.(JOB(INEW,3).EQ.3)
0020          GO TO 99999
        C BL04
0021     2004 88888= (JOB(INEW,6).EQ.1).AND.(JOB(INEW,3).EQ.2)
0022          GO TO 99999
        C BL05
0023     2005 88888= (JOB(INEW,6).EQ.1).AND.(JOB(INEW,3).EQ.1)
0024          GO TO 99999
        C BL06
0025     2006 88888= JOB(INEW,6).EQ.2
0026          GO TO 99999
        C BL09
0027     2009 88888= Q2AGE(Z)
0028          GO TO 99999
        C BL10
0029     2010 88888= SW10
0030          GO TO 99999
        C BL12
0031     2012 88888= GET2(Z)
0032          GO TO 99999
        C BL13
0033     2013 88888= SW13
0034          GO TO 99999
        C BL15
0035     2015 88888= LAST2(Z)
0036          GO TO 99999
        C BL16
0037     2016 88888= SW16
0038          GO TO 99999
        C BL17
0039     2017 88888= SW17
0040          GO TO 99999
```

```
C BL18
 2018 88888= SW18
      GO TO 99999
C BL22
 2022 88888= Q13AGE(Z)
      GO TO 99999
C BL23
 2023 88888= Q12AGE(Z)
      GO TO 99999
C BL24
 2024 88888= Q11AGE(Z)
      GO TO 99999
C BL25
 2025 88888= SW25
      GO TO 99999
C BL27
 2027 88888= .NOT.SW26
      GO TO 99999
C BL28
 2028 88888= SW28
      GO TO 99999
C BL29
 2029 88888= .NOT.SW28
      GO TO 99999
C BL32
 2032 88888= SW32
      GO TO 99999
C BL33
 2033 88888= .NOT.SW32
      GO TO 99999
C BL35
 2035 88888= SW35
      GO TO 99999
C BL37
 2037 88888= .NOT.SW36
      GO TO 99999
C BL40
 2040 88888= SW40
      GO TO 99999
C BL41
 2041 88888= .NOT.SW40
      GO TO 99999
C BL543
 2051 88888= Q15(1,1).NE.0
      GO TO 99999
C BL443
 2050 88888= Q14(1,1).NE.0
      GO TO 99999
C BL343
 2049 88888= Q13(1,1).NE.0
      GO TO 99999
C BL243
 2048 88888= Q12(1,1).NE.0
      GO TO 99999
C BL143
 2047 88888= Q11(1,1).NE.0
      GO TO 99999
C BL544
 2056 88888= Q15(1,1).EQ.0
      GO TO 99999
C BL444
 2055 88888= Q14(1,1).EQ.0
      GO TO 99999
C BL344
 2054 88888= Q13(1,1).EQ.0
      GO TO 99999
C BL244
 2053 88888= Q12(1,1).EQ.0
      GO TO 99999
C BL144
 2052 88888= Q11(1,1).EQ.0
      GO TO 99999
C BL447
 2076 88888= J13.EQ.0
      GO TO 99999
C BL448
 2079 88888= J13.NE.0
      GO TO 99999
C BL449
 2082 88888= J13.NE.0
```

```
0094              GO TO 99999
            C BL347
0095         2077 88888= J12.EQ.0
0096              GO TO 99999
            C BL348
0097         2080 88888= J12.NE.0
0098              GO TO 99999
            C BL349
0099         2083 88888= J12.NE.0
0100              GO TO 99999
            C BL247
0101         2078 88888= J11.EQ.0
0102              GO TO 99999
            C BL248
0103         2081 88888= J11.NE.0
0104              GO TO 99999
            C BL249
0105         2084 88888= J11.NE.0
0106              GO TO 99999
            C BL545
0107         2057 88888= LAST1(JX5)
0108              GO TO 99999
            C BL445
0109         2058 88888= LAST1(JX4)
0110              GO TO 99999
            C BL345
0111         2059 88888= LAST1(JX3)
0112              GO TO 99999
            C BL245
0113         2060 88888= LAST1(JX2)
0114              GO TO 99999
            C BL145
0115         2061 88888= LAST1(JX1)
0116              GO TO 99999
            C BL546
0117         2062 88888= SW546
0118              GO TO 99999
            C BL446
0119         2063 88888= SW446
0120              GO TO 99999
            C BL346
0121         2064 88888= SW346
0122              GO TO 99999
            C BL246
0123         2065 88888= SW246
0124              GO TO 99999
            C BL146
0125         2066 88888= SW146
0126              GO TO 99999
            C BL547
0127         2067 88888= SW547
0128              GO TO 99999
            C BL548
0129         2068 88888= SW548
0130              GO TO 99999
            C BL549
0131         2069 88888= SW549
0132              GO TO 99999
            C BL044
0133         2072 88888= PR1AGE(Z)
0134              GO TO 99999
            C BL046
0135         2074 88888= PR2AGE(Z)
0136              GO TO 99999
            C BL047
0137         2075 88888= PR3AGE(Z)
0138              GO TO 99999
            C TL02
0139         4002 TTTTT= TIME(Z)
0140              GO TO 99999
            C TL14
0141         4014 TTTTT= J2T
0142              GO TO 99999
            C TL15
0143         4015 TTTTT= J2T
0144              GO TO 99999
            C TL16
0145         4016 TTTTT= J2T
0146              GO TO 99999
            C TL17
0147         4017 TTTTT= J2T
0148              GO TO 99999
            C TL13
```

```
 4018 TTTTT= J2T
      GO TO 99999
C TL542
 4042 TTTTT= J15T
      GO TO 99999
C TL442
 4043 TTTTT= J14T
      GO TO 99999
C TL342
 4044 TTTTT= J13T
      GO TO 99999
C TL242
 4045 TTTTT= J12T
      GO TO 99999
C TL142
 4046 TTTTT= J11T
      GO TO 99999
C TL545
 4057 TTTTT= J15T
      GO TO 99999
C TL445
 4058 TTTTT= J14T
      GO TO 99999
C TL345
 4059 TTTTT= J13T
      GO TO 99999
C TL245
 4060 TTTTT= J12T
      GO TO 99999
C TL145
 4061 TTTTT= J11T
      GO TO 99999
C TL546
 4062 TTTTT= J15T
      GO TO 99999
C TL446
 4063 TTTTT= J14T
      GO TO 99999
C TL346
 4064 TTTTT= J13T
      GO TO 99999
C TL246
 4065 TTTTT= J12T
      GO TO 99999
C TL146
 4066 TTTTT= J11T
      GO TO 99999
C L02
    2 CONTINUE
      CALL CREATE
      GO TO 99999
C L03
    3 CONTINUE
      NSW=0
      CALL SEND23(NSW)
      GO TO 99999
C L04
    4 CONTINUE
      NSW=0
      CALL SEND22(NSW)
      GO TO 99999
C L05
    5 CONTINUE
      NSW=0
      CALL SEND21(NSW)
      GO TO 99999
C L06
    6 CONTINUE
      NJOB=KIN
      NT=JJ3I(NEW,5)
      CALL WJE2(NJOB,NT)
      GO TO 99999
C L08
    8 CONTINUE
      GO TO 99999
C L10
   10 CONTINUE
      CALL FIX02
      GO TO 99999
```

```
C L13
   13 CONTINUE
      CALL TAKE2
      GO TO 99999
C L15
   15 CONTINUE
      CALL REL(J2)
      J2=0
      J2T=0
      GO TO 99999
C L16
   16 CONTINUE
      NSW=2
      CALL SEND23(NSW)
      GO TO 99999
C L17
   17 CONTINUE
      NSW=2
      CALL SEND22(NSW)
      GO TO 99999
C L18
   18 CONTINUE
      NSW=2
      CALL SEND21(NSW)
      GO TO 99999
C L19
   19 CONTINUE
      CALL WRITE
      GO TO 99999
C L20
   20 CONTINUE
      CALL WRITE
      GO TO 99999
C L21
   21 CONTINUE
      CALL WRITE
      GO TO 99999
C L22
   22 CONTINUE
      IROW=I13
      IQ=3
      CALL FIXQ1(IQ,IROW)
      GO TO 99999
C L23
   23 CONTINUE
      IROW=I12
      IQ=2
      CALL FIXQ1(IQ,IROW)
      GO TO 99999
C L24
   24 CONTINUE
      IROW=I11
      IQ=1
      CALL FIXQ1(IQ,IROW)
      GO TO 99999
C L25
   25 CONTINUE
      GO TO 99999
C L26
   26 CONTINUE
      SW26=.FALSE.
      GO TO 99999
C L28
   28 CONTINUE
      SW28=.FALSE.
      GO TO 99999
C L32
   32 CONTINUE
      SW32=.FALSE.
      GO TO 99999
C L36
   36 CONTINUE
      SW36=.FALSE.
      GO TO 99999
C L40
   40 CONTINUE
      SW40=.FALSE.
      GO TO 99999
C L544
   55 CONTINUE
      SW25=.TRUE.
      GO TO 99999
```

```
C L444
   55 CONTINUE
      SW28=.TRUE.
      GO TO 99999
C L344
   54 CONTINUE
      SW32=.TRUE.
      GO TO 99999
C L244
   53 CONTINUE
      SW36=.TRUE.
      GO TO 99999
C L144
   52 CONTINUE
      SW40=.TRUE.
      GO TO 99999
C L543
   51 CONTINUE
      NP=5
      CALL TAKE(NP)
      JX5=J15
      GO TO 99999
C L443
   50 CONTINUE
      NP=4
      CALL TAKE(NP)
      JX4=J14
      GO TO 99999
C L343
   49 CONTINUE
      NP=3
      CALL TAKE(NP)
      JX3=J13
      GO TO 99999
C L243
   48 CONTINUE
      NP=2
      CALL TAKE(NP)
      JX2=J12
      GO TO 99999
C L143
   47 CONTINUE
      NP=1
      CALL TAKE(NP)
      JX1=J11
      GO TO 99999
C L545
   57 CONTINUE
      NJ=J15
      CALL REL(NJ)
      J15=0
      J15T=0
      GO TO 99999
C L445
   58 CONTINUE
      NJ=J14
      CALL REL(NJ)
      J14=0
      J14T=0
      GO TO 99999
C L345
   59 CONTINUE
      NJ=J13
      CALL REL(NJ)
      J13=0
      J13T=0
      GO TO 99999
C L245
   60 CONTINUE
      NJ=J12
      CALL REL(NJ)
      J12=0
      J12T=0
      GO TO 99999
C L145
   61 CONTINUE
      NJ=J11
      CALL REL(NJ)
      J11=0
      J11T=0
      GO TO 99999
C L545
   62 CONTINUE
      NJ=J15
```

```
0339              DO 6546 I=1,20
0340              IF(J08(I,1).EQ.J15)NT=J08(I,5)
0341         6546 CONTINUE
0342              CALL QUE2(NJ,NT)
0343              J15=0
0344              J15T=0
0345              GO TO 99999
            C L445
0346           63 CONTINUE
0347              NJ=J14
0348              DO 6446 I=1,20
0349              IF(J08(I,1).EQ.J14)NT=J08(I,5)
0350         6446 CONTINUE
0351              CALL QUE2(NJ,NT)
0352              J14=0
0353              J14T=0
0354              GO TO 99999
            C L346
0355           64 CONTINUE
0356              NJ=J13
0357              DO 6346 I=1,20
0358              IF(J03(I,1).EQ.J13)NT=J08(I,5)
0359         6346 CONTINUE
0360              CALL QUE2(NJ,NT)
0361              J13=0
0362              J13T=0
0363              GO TO 99999
            C L246
0364           65 CONTINUE
0365              NJ=J12
0366              DO 6246 I=1,20
0367              IF(J03(I,1).EQ.J12)NT=J08(I,5)
0368         6246 CONTINUE
0369              CALL QUE2(NJ,NT)
0370              J12=0
0371              J12T=0
0372              GO TO 99999
            C L146
0373           66 CONTINUE
0374              NJ=J11
0375              DO 6146 I=1,20
0376              IF(J03(I,1).EQ.J11)NT=J08(I,5)
0377         6146 CONTINUE
0378              CALL QUE2(NJ,NT)
0379              J11=0
0380              J11T=0
0381              GO TO 99999
            C L547
0382           67 CONTINUE
0383              SW547=.FALSE.
0384              JX1=J11
0385              GO TO 99999
            C L548
0386           68 CONTINUE
0387              SW548=.FALSE.
0388              JX2=J12
0389              GO TO 99999
            C L549
0390           69 CONTINUE
0391              SW549=.FALSE.
0392              JX3=J13
0393              GO TO 99999
            C L249
0394           84 CONTINUE
0395              NP=1
0396              CALL FIXQ5(NP)
0397              SW547=.TRUE.
0398              GO TO 99999
            C L349
0399           83 CONTINUE
0400              NP=2
0401              CALL FIXQ5(NP)
0402              SW548=.TRUE.
0403              GO TO 99999
            C L449
0404           82 CONTINUE
0405              NP=3
0406              CALL FIXQ5(NP)
0407              SW549=.TRUE.
0408        99999 RETURN
0409              END
```

```
0001          SUBROUTINE TAKE(NP)
0002          IMPLICIT INTEGER(Q).
0003          INTEGER CT
0004          COMMON/TERM/CT
0005          COMMON/LAMBDA/LDELT(100),LQT(100)
0006          COMMON/BLK1/
             1 J03(20,15), Q2(10,3), Q15(10,2), Q14(10,2), Q13(10,2),
             1 Q12(10,2), Q11(10,2), J2, J2T, J15, J15T, J14, J14T, J13, J13T,
             1 J12, J12T, J11, J11T, JN, KIN, KOUT, NS, NPTR, INEW,
             1 I13, I12, I11,
             1 SW10, SW16, SW17, SW18, SW546, SW445, SW346, SW245, SW145,
             1   SW547, SW548, SW549, SW13
0007          LOGICAL
             1 Q2AGE, GET2, LAST2, Q13AGE, Q12AGE, Q11AGE, LAST1, PR1AGE,
             1 PR2AGE, PR3AGE,
             1 SW10, SW16, SW17, SW18, SW546, SW445, SW346, SW246, SW146,
             1   SW547, SW548, SW549, SW13
0008          GO TO (1,2,3,4,5),NP
0009        1 J11=Q11(1,1)
0010          J11T=Q11(1,2)
0011          DO 10 I=2,10
0012          Q11(I-1,1)=Q11(I,1)
0013       10 Q11(I-1,2)=Q11(I,2)
0014          RETURN
0015        2 J12=Q12(1,1)
0016          J12T=Q12(1,2)
0017          DO 20 I=2,10
0018          Q12(I-1,1)=Q12(I,1)
0019       20 Q12(I-1,2)=Q12(I,2)
0020          RETURN
0021        3 J13=Q13(1,1)
0022          J13T=Q13(1,2)
0023          DO 30 I=2,10
0024          Q13(I-1,1)=Q13(I,1)
0025       30 Q13(I-1,2)=Q13(I,2)
0026          RETURN
0027        4 J14=Q14(1,1)
0028          J14T=Q14(1,2)
0029          DO 40 I=2,10
0030          Q14(I-1,1)=Q14(I,1)
0031       40 Q14(I-1,2)=Q14(I,2)
0032          RETURN
0033        5 J15=Q15(1,1)
0034          J15T=Q15(1,2)
0035          DO 50 I=2,10
0036          Q15(I-1,1)=Q15(I,1)
0037       50 Q15(I-1,2)=Q15(I,2)
0038          RETURN

0039          END
```

```
0001          SUBROUTINE TAKE2
0002          IMPLICIT INTEGER(Q)
0003          INTEGER CT
0004          COMMON/TERM/CT
0005          COMMON/LAMBDA/LDELT(100),LQT(100)
0006          COMMON/BLK1/
             1 J03(20,15), Q2(10,3), Q15(10,2), Q14(10,2), Q13(10,2),
             1 Q12(10,2), Q11(10,2), J2, J2T, J15, J15T, J14, J14T, J13, J13T,
             1 J12, J12T, J11, J11T, JN, KIN, KOUT, NS, NPTR, INEW,
             1 I13, I12, I11,
             1 SW10, SW16, SW17, SW18, SW546, SW445, SW346, SW245, SW145,
             1   SW547, SW548, SW549, SW13
0007          LOGICAL
             1 Q2AGE, GET2, LAST2, Q13AGE, Q12AGE, Q11AGE, LAST1, PR1AGE,
             1 PR2AGE, PR3AGE,
             1 SW10, SW16, SW17, SW18, SW546, SW445, SW346, SW246, SW146,
             1   SW547, SW548, SW549, SW13
0008          J2=Q2(1,1)
0009          J2T=Q2(1,2)
0010          DO 1 I=2,10
0011          Q2(I-1,1)=Q2(I,1)
0012          Q2(I-1,2)=Q2(I,2)
0013          Q2(I-1,3)=Q2(I,3)
0014        1 CONTINUE
0015          RETURN
0016          END
```

```
0001          LOGICAL FUNCTION Q11AGE(Z)
0002          IMPLICIT INTEGER(Q)
0003          INTEGER CT
0004          COMMON/TERM/CT
0005          COMMON/LAMBDA/LDELT(100),LQT(100)
0006          COMMON/BLK1/
             1 JOB(20,15), Q2(10,3), Q15(10,2), Q14(10,2), Q13(10,2),
             1 Q12(10,2), Q11(10,2), J2, J2T, J15, J15T, J14, J14T, J13, J13T,
             1 J12, J12T, J11, J11T, JN, KIN, KOUT, NS, NPTR, INEW,
             1 I13, I12, I11,
             1 SW10, SW16, SW17, SW18, SW546, SW446, SW346, SW246, SW146,
             1   SW547, SW548, SW549, SW13
0007          LOGICAL
             1 Q2AGE, GET2, LAST2, Q13AGE, Q12AGE, Q11AGE, LASTI, PR1AGE,
             1 PR2AGE, PR3AGE,
             1 SW10, SW16, SW17, SW18, SW546, SW446, SW346, SW246, SW146,
             1   SW547, SW548, SW549, SW13
0008          DO 1 I=1,10
0009          IF(Q11(I,1).EQ.0)GO TO 2
0010          NJ=Q11(I,1)
0011          DO 3 J=1,20
0012          IF(JOB(J,1).EQ.NJ)GO TO 4
0013        3 CONTINUE
0014          WRITE(NPTR,301)
0015      301 FORMAT(' ','ERROR IN Q11AGE')
0016          CT=LQT(1)
0017          RETURN
0018        4 IF((LQT(1)-JOB(J,2)).GT.30)GO TO 5
0019        1 CONTINUE
0020        2 Q11AGE=.FALSE.
0021          RETURN
0022        5 I11=I
0023          Q11AGE=.TRUE.
0024          RETURN
0025          END
```

```
0001          LOGICAL FUNCTION Q12AGE(Z)
0002          IMPLICIT INTEGER(Q)
0003          INTEGER CT
0004          COMMON/TERM/CT
0005          COMMON/LAMBDA/LDELT(100),LQT(100)
0006          COMMON/BLK1/
             1 JOB(20,15), Q2(10,3), Q15(10,2), Q14(10,2), Q13(10,2),
             1 Q12(10,2), Q11(10,2), J2, J2T, J15, J15T, J14, J14T, J13, J13T,
             1 J12, J12T, J11, J11T, JN, KIN, KOUT, NS, NPTR, INEW,
             1 I13, I12, I11,
             1 SW10, SW16, SW17, SW18, SW546, SW446, SW346, SW246, SW146,
             1   SW547, SW548, SW549, SW13
0007          LOGICAL
             1 Q2AGE, GET2, LAST2, Q13AGE, Q12AGE, Q11AGE, LASTI, PR1AGE,
             1 PR2AGE, PR3AGE,
             1 SW10, SW16, SW17, SW18, SW546, SW446, SW346, SW246, SW146,
             1   SW547, SW548, SW549, SW13
0008          DO 1 I=1,10
0009          IF(Q12(I,1).EQ.0)GO TO 2
0010          NJ=Q12(I,1)
0011          DO 3 J=1,20
0012          IF(JOB(J,1).EQ.NJ)GO TO 4
0013        3 CONTINUE
0014          WRITE(NPTR,301)
0015      301 FORMAT(' ','ERROR IN Q12AGE')
0016          CT=LQT(1)
0017          RETURN
0018        4 IF((LQT(1)-JOB(J,2)).GT.30)GO TO 5
0019        1 CONTINUE
0020        2 Q12AGE=.FALSE.
0021          RETURN
0022        5 I12=I
0023          Q12AGE=.TRUE.
0024          RETURN
0025          END
```

```
0001          LOGICAL FUNCTION Q2AGE(Z)
0002          IMPLICIT INTEGER(Q)
0003          INTEGER CT
0004          COMMON/TERM/CT
0005          COMMON/LAMBDA/LDELT(100),LQT(100)
0006          COMMON/BLK1/
             1 JOB(20,15), Q2(10,3), Q15(10,2), Q14(10,2), Q13(10,2),
             1 Q12(10,2), Q11(10,2), J2, J2T, J15, J15T, J14, J14T, J13, J13T,
             1 J12, J12T, J11, J11T, JN, KIN, KOUT, NS, NPTR, INEW,
             1 I13, I12, I11,
             1 SW10, SW16, SW17, SW18, SW545, SW445, SW345, SW245, SW145,
             1   SW547, SW548, SW549, SW13
0007          LOGICAL
             1 Q2AGE, GET2, LAST2, Q13AGE, Q12AGE, Q11AGE, LAST1, PR1AGE,
             1 PR2AGE, PR3AGE,
             1 SW10, SW16, SW17, SW18, SW546, SW446, SW346, SW246, SW146,
             1   SW547, SW548, SW549, SW13
0008          DO 1 I=1,10
0009          IF(Q2(I,1).EQ.0)GO TO 5
0010          IF(Q2(I,3).EQ.1)GO TO 1
0011          NJ=Q2(I,1)
0012          DO 2 J=1,20
0013          IF(JOB(J,1).EQ.NJ)GO TO 3
0014        2 CONTINUE
0015        3 IF((LQT(1)-JOB(J,2)).GT.30)GO TO 4
0016        1 CONTINUE
0017        5 Q2AGE=.TRUE.
0018          SW10=.FALSE.
0019          RETURN
0020        4 Q2AGE=.FALSE.
0021          SW10=.TRUE.
0022          RETURN
0023          END
```

```
0001          LOGICAL FUNCTION Q13AGE(Z)
0002          IMPLICIT INTEGER(Q)
0003          INTEGER CT
0004          COMMON/TERM/CT
0005          COMMON/LAMBDA/LDELT(100),LQT(100)
0006          COMMON/BLK1/
             1 JOB(20,15), Q2(10,3), Q15(10,2), Q14(10,2), Q13(10,2),
             1 Q12(10,2), Q11(10,2), J2, J2T, J15, J15T, J14, J14T, J13, J13T,
             1 J12, J12T, J11, J11T, JN, KIN, KOUT, NS, NPTR, INEW,
             1 I13, I12, I11,
             1 SW10, SW16, SW17, SW18, SW546, SW446, SW346, SW246, SW146,
             1   SW547, SW548, SW549, SW13
0007          LOGICAL
             1 Q2AGE, GET2, LAST2, Q13AGE, Q12AGE, Q11AGE, LAST1, PR1AGE,
             1 PR2AGE, PR3AGE,
             1 SW10, SW16, SW17, SW18, SW546, SW446, SW346, SW246, SW146,
             1   SW547, SW548, SW549, SW13
0008          DO 1 I=1,10
0009          IF(Q13(I,1).EQ.0)GO TO 2
0010          NJ=Q13(I,1)
0011          DO 3 J=1,20
0012          IF(JOB(J,1).EQ.NJ)GO TO 4
0013        3 CONTINUE
0014          WRITE(NPTR,301)
0015      301 FORMAT(' ','ERROR IN Q13AGE')
0016          CT=LQT(1)
0017          RETURN
0018        4 IF((LQT(1)-JOB(J,2)).GT.30)GO TO 5
0019        1 CONTINUE
0020        2 Q13AGE=.FALSE.
0021          RETURN
0022        5 I13=I
0023          Q13AGE=.TRUE.
0024          RETURN
0025          END
```

```
0001          LOGICAL FUNCTION PR2AGE(Z)
0002          IMPLICIT INTEGER(Q)
0003          INTEGER CT
0004          COMMON/TERM/CT
0005          COMMON/LAMBDA/LDELT(100),LQT(100)
0006          COMMON/BLK1/
             1 JOB(20,15), Q2(10,3), Q15(10,2), Q14(10,2), Q13(10,2),
             1 Q12(10,2), Q11(10,2), J2, J2T, J15, J15T, J14, J14T, J13, J13T,
             1 J12, J12T, J11, J11T, JN, KIN, KOUT, NS, NPTR, INEW,
             1 I13, I12, I11,
             1 SW10, SW16, SW17, SW18, SW546, SW446, SW346, SW246, SW146,
             1   SW547, SW548, SW549, SW13
0007          LOGICAL
             1 Q2AGE, GET2, LAST2, Q13AGE, Q12AGE, Q11AGE, LAST1, PR1AGE,
             1 PR2AGE, PR3AGE,
             1 SW10, SW16, SW17, SW18, SW546, SW446, SW346, SW246, SW146,
             1   SW547, SW548, SW549, SW13
0008          IF(J12.EQ.0)GO TO 1
0009          DO 2 I=1,20
0010          IF(JOB(I,1).EQ.J12)GO TO 3
0011        2 CONTINUE
0012          WRITE(NPTR,301)
0013      301 FORMAT(' ','ERROR IN PR2AGE')
0014          CT=LQT(1)
0015          RETURN
0016        3 IF((LQT(1)-JOB(I,2)).GT.30)GO TO 4
0017        1 PR2AGE=.FALSE.
0018          RETURN
0019        4 IF((J15.EQ.0).AND.(J14.EQ.0).AND.(J13.EQ.0))GO TO 1
0020          PR2AGE=.TRUE.
0021          RETURN
0022          END
```

```
0001          LOGICAL FUNCTION PR3AGE(Z)
0002          IMPLICIT INTEGER(Q)
0003          INTEGER CT
0004          COMMON/TERM/CT
0005          COMMON/LAMBDA/LDELT(100),LQT(100)
0006          COMMON/BLK1/
             1 JOB(20,15), Q2(10,3), Q15(10,2), Q14(10,2), Q13(10,2),
             1 Q12(10,2), Q11(10,2), J2, J2T, J15, J15T, J14, J14T, J13, J13T,
             1 J12, J12T, J11, J11T, JN, KIN, KOUT, NS, NPTR, INEW,
             1 I13, I12, I11,
             1 SW10, SW16, SW17, SW18, SW546, SW446, SW346, SW246, SW146,
             1   SW547, SW548, SW549, SW13
0007          LOGICAL
             1 Q2AGE, GET2, LAST2, Q13AGE, Q12AGE, Q11AGE, LAST1, PR1AGE,
             1 PR2AGE, PR3AGE,
             1 SW10, SW16, SW17, SW18, SW546, SW446, SW346, SW246, SW146,
             1   SW547, SW548, SW549, SW13
0008          IF(J13.EQ.0)GO TO 1
0009          DO 2 I=1,20
0010          IF(JOB(I,1).EQ.J13)GO TO 3
0011        2 CONTINUE
0012          WRITE(NPTR,301)
0013      301 FORMAT(' ','ERROR IN PR3AGE')
0014          CT=LQT(1)
0015          RETURN
0016        3 IF((LQT(1)-JOB(I,2)).GT.30)GO TO 4
0017        1 PR3AGE=.FALSE.
0018          RETURN
0019        4 IF((J15.EQ.0).AND.(J14.EQ.0))GO TO 1
0020          PR3AGE=.TRUE.
0021          RETURN
0022          END
```

```
0001          LOGICAL FUNCTION LAST2(Z)
0002          IMPLICIT INTEGER(Q)
0003          INTEGER CT
0004          COMMON/TERM/CT
0005          COMMON/LAMBDA/LDELT(100),LQT(100)
0006          COMMON/BLK1/
             1  JOB(20,15), Q2(10,3), Q15(10,2), Q14(10,2), Q13(10,2),
             1  Q12(10,2), Q11(10,2), J2, J2T, J15, J15T, J14, J14T, J13, J13T,
             1  J12, J12T, J11, J11T, JN, KIN, KOUT, NS, NPTR, INEW,
             1  I13, I12, I11,
             1  SW10, SW16, SW17, SW18, SW546, SW446, SW346, SW246, SW146,
             1   SW547, SW548, SW549, SW13
0007          LOGICAL
             1  Q2AGE, GET2, LAST2, Q13AGE, Q12AGE, Q11AGE, LASTI, PRIAGE,
             1  PR2AGE, PR3AGE,
             1  SW10, SW16, SW17, SW18, SW546, SW446, SW346, SW246, SW146,
             1   SW547, SW548, SW549, SW13
0008          SW16=.FALSE.
0009          SW17=.FALSE.
0010          SW18=.FALSE.
0011          DO 1 I=1,20
0012          IF(JOB(I,1).EQ.J2)GO TO 2
0013        1 CONTINUE
0014          WRITE(NPTR,301)
0015      301 FORMAT(' ','ERROR AT LAST2')
0016          CT=LQT(1)
0017          RETURN
0018        2 IF(JOB(I,6).EQ.1)GO TO 3
0019          LAST2=.FALSE.
0020          IF(JOB(I,3).EQ.3)SW16=.TRUE.
0021          IF(JOB(I,3).EQ.2)SW17=.TRUE.
0022          IF(JOB(I,3).EQ.1)SW18=.TRUE.
0023          RETURN
0024        3 LAST2=.TRUE.
0025          RETURN
0026          END
```

```
0001          LOGICAL FUNCTION PRIAGE(Z)
0002          IMPLICIT INTEGER(Q)
0003          INTEGER CT
0004          COMMON/TERM/CT
0005          COMMON/LAMBDA/LDELT(100),LQT(100)
0006          COMMON/BLK1/
             1  JOB(20,15), Q2(10,3), Q15(10,2), Q14(10,2), Q13(10,2),
             1  Q12(10,2), Q11(10,2), J2, J2T, J15, J15T, J14, J14T, J13, J13T,
             1  J12, J12T, J11, J11T, JN, KIN, KOUT, NS, NPTR, INEW,
             1  I13, I12, I11,
             1  SW10, SW16, SW17, SW18, SW546, SW446, SW346, SW246, SW146,
             1   SW547, SW548, SW549, SW13
0007          LOGICAL
             1  Q2AGE, GET2, LAST2, Q13AGE, Q12AGE, Q11AGE, LASTI, PRIAGE,
             1  PR2AGE, PR3AGE,
             1  SW10, SW16, SW17, SW18, SW546, SW446, SW346, SW246, SW146,
             1   SW547, SW548, SW549, SW13
0008          IF(J11.EQ.0)GO TO 1
0009          DO 2 I=1,20
0010          IF(JOB(I,1).EQ.J11)GO TO 3
0011        2 CONTINUE
0012          WRITE(NPTR,301)
0013      301 FORMAT(' ','ERROR IN PRIAGE')
0014          CT=LQT(1)
0015          RETURN
0016        3 IF((LQT(1)-JOB(I,2)).GT.30)GO TO 4
0017        1 PRIAGE=.FALSE.
0018          RETURN
0019        4 IF((J15.EQ.0).AND.(J14.EQ.0).AND.(J13.EQ.0).AND.(J12.EQ.0))GO TO 1
0020          PRIAGE=.TRUE.
0021          RETURN
0022          END
```

```
0001          FUNCTION TIME(Z)
0002          IMPLICIT INTEGER(Q)
0003          INTEGER CT
0004          COMMON/TERM/CT
0005          COMMON/LAMBDA/LDELT(100),LQT(100)
0006          COMMON/BLK1/
             1 JOB(20,15), Q2(10,3), Q15(10,2), Q14(10,2), Q13(10,2),
             1 Q12(10,2), Q11(10,2), J2, J2T, J15, J15T, J14, J14T, J13, J13T,
             1 J12, J12T, J11, J11T, JN, KIN, KOUT, NS, NPTR, INEW,
             1 I13, I12, I11,
             1 SW10, SW16, SW17, SW18, SW545, SW445, SW345, SW245, SW145,
             1   SW547, SW548, SW549, SW13
0007          LOGICAL
             1 Q2AGE, GET2, LAST2, Q13AGE, Q12AGE, Q11AGE, LAST1, PR1AGE,
             1 PR2AGE, PR3AGE,
             1 SW10, SW16, SW17, SW18, SW546, SW446, SW346, SW246, SW146,
             1   SW547, SW548, SW549, SW13
0008          INTEGER*2 TIME
0009          NSEED=NS
0010          CALL ATIME(5.0,  3.0,  0.0, 15, VAL, NSEED )
0011          NS=NSEED
0012          IVAL=VAL
0013          TIME=IVAL
0014          RETURN
0015          END
```

```
0001          SUBROUTINE FIXQ2
0002          IMPLICIT INTEGER(Q)
0003          INTEGER CT
0004          COMMON/TERM/CT
0005          COMMON/LAMBDA/LDELT(100),LQT(100)
0006          COMMON/BLK1/
             1 JOB(20,15), Q2(10,3), Q15(10,2), Q14(10,2), Q13(10,2),
             1 Q12(10,2), Q11(10,2), J2, J2T, J15, J15T, J14, J14T, J13, J13T,
             1 J12, J12T, J11, J11T, JN, KIN, KOUT, NS, NPTR, INEW,
             1 I13, I12, I11,
             1 SW10, SW16, SW17, SW18, SW545, SW445, SW345, SW245, SW145,
             1   SW547, SW548, SW549, SW13
0007          LOGICAL
             1 Q2AGE, GET2, LAST2, Q13AGE, Q12AGE, Q11AGE, LAST1, PR1AGE,
             1 PR2AGE, PR3AGE,
             1 SW10, SW16, SW17, SW18, SW546, SW446, SW346, SW246, SW146,
             1   SW547, SW548, SW549, SW13
0008          IT=1
0009          DO 1 I=1,10
0010          IF(Q2(I,1).EQ.0)RETURN
0011          IF(Q2(I,3).EQ.1)GO TO 2
0012          NJ=Q2(I,1)
0013          DO 3 J=1,20
0014          IF(JOB(J,1).EQ.NJ)GO TO 4
0015        3 CONTINUE
0016          WRITE(NPTR,301)
0017      301 FORMAT(' ','ERROR IN FIXQ2')
0018          CT=LQT(1)
0019          RETURN
0020        4 IF((LQT(1)-JOB(J,2)).GT.31)GO TO 5
0021          GO TO 1
0022        5 IF(I.EQ.1)GO TO 6
0023          IF(I.EQ. IT  )GO TO 6
0024          Q2(IT,3)=1
0025        7 NSAVE1=Q2(I,1)
0026          NSAVE2=Q2(I,2)
0027          Q2(I,1)=Q2(I-1,1)
0028          Q2(I,2)=Q2(I-1,2)
0029          Q2(I-1,1)=NSAVE1
0030          Q2(I-1,2)=NSAVE2
0031          IF((I-1).EQ.IT)RETURN
0032          I=I-1
0033          GO TO 7
0034        2 IT=IT+1
0035        1 CONTINUE
0036        6 Q2(I,3)=1
0037          RETURN
0038          END
```

```
0001          LOGICAL FUNCTION GET2(Z)
0002          IMPLICIT INTEGER(Q)
0003          INTEGER CT
0004          COMMON/TERM/CT
0005          COMMON/LAMBDA/LDELT(100),LQT(100)
0006          COMMON/BLK1/
             1  JOB(20,15), Q2(10,3), Q15(10,2), Q14(10,2), Q13(10,2),
             1  Q12(10,2), Q11(10,2), J2, J2T, J15, J15T, J14, J14T, J13, J13T,
             1  J12, J12T, J11, J11T, JN, KIN, KOUT, NS, NPTR, INEW,
             1  I13, I12, I11,
             1  SW10, SW16, SW17, SW18, SW546, SW446, SW346, SW246, SW146,
             1   SW547, SW548, SW549, SW13
0007          LOGICAL
             1  Q2AGE, GET2, LAST2, Q13AGE, Q12AGE, Q11AGE, LAST1, PR1AGE,
             1  PR2AGE, PR3AGE,
             1  SW10, SW16, SW17, SW18, SW546, SW446, SW346, SW246, SW146,
             1   SW547, SW548, SW549, SW13
0008          IF(Q2(1,1).EQ.0)GO TO 1
0009          GET2=.FALSE.
0010          SW13=.TRUE.
0011          RETURN
0012        1 GET2=.TRUE.
0013          SW13=.FALSE.
0014          RETURN
0015          END
```

```
0001          SUBROUTINE FIXQ1(IQ,IROW)
0002          IMPLICIT INTEGER(Q)
0003          INTEGER CT
0004          COMMON/TERM/CT
0005          COMMON/LAMBDA/LDELT(100),LQT(100)
0006          COMMON/BLK1/
             1  JOB(20,15), Q2(10,3), Q15(10,2), Q14(10,2), Q13(10,2),
             1  Q12(10,2), Q11(10,2), J2, J2T, J15, J15T, J14, J14T, J13, J13T,
             1  J12, J12T, J11, J11T, JN, KIN, KOUT, NS, NPTR, INEW,
             1  I13, I12, I11,
             1  SW10, SW16, SW17, SW18, SW546, SW446, SW346, SW246, SW146,
             1   SW547, SW548, SW549, SW13
0007          LOGICAL
             1  Q2AGE, GET2, LAST2, Q13AGE, Q12AGE, Q11AGE, LAST1, PR1AGE,
             1  PR2AGE, PR3AGE,
             1  SW10, SW16, SW17, SW18, SW546, SW446, SW346, SW246, SW146,
             1   SW547, SW548, SW549, SW13
0008          DO 4 I=1,10
0009          IF(Q14(I,1).EQ.0)GO TO 5
0010        4 CONTINUE
0011          WRITE(NPTR,301)
0012      301 FORMAT(' ','Q14 FULL')
0013          CT=LQT(1)
0014          RETURN
0015        5 IP=I
0016          K=IROW+1
0017          GO TO (1,2,3),IQ
0018        1 Q14(IP,1)=Q11(IROW,1)
0019          Q14(IP,2)=Q11(IROW,2)
0020          DO 10 I=K,10
0021          Q11(I-1,1)=Q11(I,1)
0022       10 Q11(I-1,2)=Q11(I,2)
0023          RETURN
0024        2 Q14(IP,1)=Q12(IROW,1)
0025          Q14(IP,2)=Q12(IROW,2)
0026          DO 20 I=K,10
0027          Q12(I-1,1)=Q12(I,1)
0028       20 Q12(I-1,2)=Q12(I,2)
0029          RETURN
0030        3 Q14(IP,1)=Q13(IROW,1)
0031          Q14(IP,2)=Q13(IROW,2)
0032          DO 30 I=K,10
0033          Q13(I-1,1)=Q13(I,1)
0034          Q13(I-1,2)=Q13(I,1)
0035       30 CONTINUE
0036          RETURN
0037          END
```

```
0001          SUBROUTINE SEND21(NSW)
0002          IMPLICIT INTEGER(Q)
0003          INTEGER CT
0004          COMMON/TERM/CT
0005          COMMON/LAMBDA/LDELT(100),LQT(100)
0006          COMMON/BLK1/
             1  J08(20,15), Q2(10,3), Q15(10,2), Q14(10,2), Q13(10,2),
             1  Q12(10,2), Q11(10,2), J2, J2T, J15, J15T, J14, J14T, J13, J13T,
             1  J12, J12T, J11, J11T, JN, KIN, KOUT, NS, NPTR, INEW,
             1  I13, I12, I11,
             1  SW10, SW16, SW17, SW18, SW546, SW446, SW346, SW246, SW146,
             1   SW547, SW548, SW549, SW13
0007          LOGICAL
             1  Q2AGE, GET2, LAST2, Q13AGE, Q12AGE, Q11AGE, LAST1, PR1AGE,
             1  PR2AGE, PR3AGE,
             1  SW10, SW16, SW17, SW18, SW546, SW446, SW346, SW246, SW146,
             1   SW547, SW548, SW549, SW13
0008          DO 1 I=1,10
0009          IF(Q11(I,1).EQ.0)GO TO 2
0010        1 CONTINUE
0011          WRITE(NPTR,301)
0012      301 FORMAT(' ','Q11 FULL')
0013          CT=LQT(1)
0014          RETURN
0015        2 IF(NSW.EQ.0)GO TO 5
0016          DO 3 N=1,20
0017          IF(J08(N,1).EQ.J2)GO TO 4
0018        3 CONTINUE
0019          WRITE(NPTR,302)
0020      302 FORMAT(' ','FAULT IN SEND21')
0021          CT=LQT(1)
0022          RETURN
0023        4 JTIME=J08(N,4)
0024          Q11(I,1)=J2
0025          Q11(I,2)=JTIME
0026          J2=0
0027          J2T=0
0028          RETURN
0029        5 Q11(I,1)=J03(INEW,1)
0030          Q11(I,2)=J03(INEW,4)
0031          RETURN
0032          END
```

```
0001          LOGICAL FUNCTION LAST1(JX)
0002          IMPLICIT INTEGER(Q)
0003          INTEGER CT
0004          COMMON/TERM/CT
0005          COMMON/LAMBDA/LDELT(100),LQT(100)
0006          COMMON/BLK1/
             1 JOB(20,15), Q2(10,3), Q15(10,2), Q14(10,2), Q13(10,2),
             1 Q12(10,2), Q11(10,2), J2, J2T, J15, J15T, J14, J14T, J13, J13T,
             1 J12, J12T, J11, J11T, JN, XIN, XOUT, NS, NPTR, INEW,
             1 I13, I12, I11,
             1 SW10, SW16, SW17, SW18, SW546, SW446, SW346, SW246, SW146,
             1   SW547, SW548, SW549, SW13
0007          LOGICAL
             1 Q2AGE, GET2, LAST2, Q13AGE, Q12AGE, Q11AGE, LAST1, PR1AGE,
             1 PR2AGE, PR3AGE,
             1 SW10, SW16, SW17, SW18, SW546, SW446, SW346, SW246, SW146,
             1   SW547, SW548, SW549, SW13
0008          SW546=.FALSE.
0009          SW446=.FALSE.
0010          SW346=.FALSE.
0011          SW246=.FALSE.
0012          SW146=.FALSE.
0013          DO 1 I=1,20
0014          IF(JOB(I,1).EQ.JX)GO TO 2
0015        1 CONTINUE
0016          WRITE(NPTR,301) JX
0017      301 FORMAT(' ','ERROR IN LAST1  JX=',G14.7)
0018          RETURN
0019        2 IF(JOB(I,6).EQ.1)GO TO 3
0020          LAST1=.TRUE.
0021          RETURN
0022        3 LAST1=.FALSE.
0023          SW546=.TRUE.
0024          SW446=.TRUE.
0025          SW346=.TRUE.
0026          SW246=.TRUE.
0027          SW146=.TRUE.
0028          RETURN
0029          END
```

```
0001          SUBROUTINE QUE2(NJOB,NT)
0002          IMPLICIT INTEGER(Q).
0003          INTEGER CT
0004          COMMON/TERM/CT
0005          COMMON/LAMBDA/LDELT(100),LQT(100)
0006          COMMON/BLK1/
             1 JOB(20,15), Q2(10,3), Q15(10,2), Q14(10,2), Q13(10,2),
             1 Q12(10,2), Q11(10,2), J2, J2T, J15, J15T, J14, J14T, J13, J13T,
             1 J12, J12T, J11, J11T, JN, KIN, KOUT, NS, NPTR, INEW,
             1 I13, I12, I11,
             1 SW10, SW16, SW17, SW18, SW546, SW446, SW346, SW246, SW146,
             1  SW547, SW548, SW549, SW13
0007          LOGICAL
             1 Q2AGE, GET2, LAST2, Q13AGE, Q12AGE, Q11AGE, LAST1, PR1AGE,
             1 PR2AGE, PR3AGE,
             1 SW10, SW16, SW17, SW18, SW546, SW446, SW346, SW246, SW146,
             1  SW547, SW548, SW549, SW13
0008          IF(NJOB.EQ.0)RETURN
0009          DO 1 I=1,10
0010          IF(Q2(I,1).EQ.0)GO TO 2
0011        1 CONTINUE
0012          WRITE(NPTR,301)
0013      301 FORMAT(' ',' Q2 FULL')
0014          CT=LQT(1)
0015          RETURN
0016        2 Q2(I,1)=NJOB
0017          Q2(I,2)=NT
0018          IF(I.EQ.1)RETURN
0019          IB=I
0020        3 IT=IB-1
0021          IF((Q2(IB,2).LT.Q2(IT,2)).AND.(Q2(IT,3).EQ.0))GO TO 4
0022          RETURN
0023        4 NSAVE=Q2(IT,1)
0024          Q2(IT,1)=Q2(IB,1)
0025          Q2(IB,1)=NSAVE
0026          NSAVE=Q2(IT,2)
0027          Q2(IT,2)=Q2(IB,2)
0028          Q2(IB,2)=NSAVE
0029          IF(IT.EQ.1)RETURN
0030          IB=IB-1
0031          GO TO 3
0032          END
```

```
0001          SUBROUTINE FIXQ5(NP)
0002          IMPLICIT INTEGER(Q)
0003          INTEGER CT
0004          INTEGER*2 KJ,KREMAN
0005          COMMON/TERM/CT
0006          COMMON/LAMBDA/LDELT(100),LQT(100)
0007          COMMON /CHI3/ KJ(1000),KREMAN(1000)
0008          COMMON/BLK1/
             1 JOB(20,15), Q2(10,3), Q15(10,2), Q14(10,2), Q13(10,2),
             1 Q12(10,2), Q11(10,2), J2, J2T, J15, J15T, J14, J14T, J13, J13T,
             1 J12, J12T, J11, J11T, JN, KIN, KOUT, NS, NPTR, INEW,
             1 I13, I12, I11,
             1 SW10, SW16, SW17, SW18, SW546, SW446, SW346, SW246, SW146,
             1   SW547, SW548, SW549, SW13
0009          LOGICAL
             1 Q2AGE, GET2, LAST2, Q13AGE, Q12AGE, Q11AGE, LAST1, PR1AGE,
             1 PR2AGE, PR3AGE,
             1 SW10, SW16, SW17, SW18, SW546, SW446, SW346, SW246, SW146,
             1   SW547, SW548, SW549, SW13
0010          DO 10 I=1,10
0011          IF(Q15(I,1).EQ.0) GO TO 11
0012       10 CONTINUE
0013       12 WRITE(NPTR,301)
0014      301 FORMAT(' ','Q15 FULL')
0015          CT=LQT(1)
0016          RETURN
0017       11 GO TO (1,2,3),NP
0018        1 Q15(I,1)=J11
0019          Q15(I,2) = J11T - KREMAN(46)
0020          IF(Q15(I,2).LE.1)Q15(I,2)=2
0021          J11T=0
0022          J11=0
0023          RETURN
0024        2 Q15(I,1)=J12
0025          Q15(I,2) = J12T - KREMAN(45)
0026          IF(Q15(I,2).LE.1)Q15(I,2)=2
0027          J12T=0
0028          J12=0
0029          RETURN
0030        3 Q15(I,1)=J13
0031          IF(Q15(I,2).LE.1)Q15(I,2)=2
0032          Q15(I,2) = J13T - KREMAN(44)
0033          J13T=0
0034          J13=0
0035          RETURN
0036          END
```

```
0001          SUBROUTINE SEND22(NSW)
0002          IMPLICIT INTEGER(Q)
0003          INTEGER CT
0004          COMMON/TERM/CT
0005          COMMON/LAMBDA/LDELT(100),LQT(100)
0006          COMMON/BLK1/
             1 JOB(20,15), Q2(10,3), Q15(10,2), Q14(10,2), Q13(10,2),
             1 Q12(10,2), Q11(10,2), J2, J2T, J15, J15T, J14, J14T, J13, J13T,
             1 J12, J12T, J11, J11T, JN, KIN, KOUT, NS, NPTR, INEW,
             1 I13, I12, I11,
             1 SW10, SW16, SW17, SW18, SW546, SW446, SW346, SW246, SW146,
             1  SW547, SW548, SW549, SW13
0007          LOGICAL
             1 Q2AGE, GET2, LAST2, Q13AGE, Q12AGE, Q11AGE, LASTI, PR1AGE,
             1 PR2AGE, PR3AGE,
             1 SW10, SW16, SW17, SW18, SW546, SW446, SW346, SW246, SW146,
             1  SW547, SW548, SW549, SW13
0008          DO 1 I=1,10
0009          IF(Q12(I,1).EQ.0)GO TO 2
0010        1 CONTINUE
0011          WRITE(NPTR,301)
0012      301 FORMAT(' ',' Q12 FULL')
0013          CT=LQT(1)
0014          RETURN
0015        2 IF(NSW.EQ.0)GO TO 5
0016          DO 3 N=1,20
0017          IF(JOB(N,1).EQ.J2)GO TO 4
0018        3 CONTINUE
0019          WRITE(NPTR,302)
0020      302 FORMAT(' ','FAULT IN SEND22')
0021          CT=LQT(1)
0022          RETURN
0023        4 JTIME=JOB(N,4)
0024          Q12(I,1)=J2
0025          Q12(I,2)=JTIME
0026          J2=0
0027          J2T=0
0028          RETURN
0029        5 Q12(I,1)=JOB(INEW,1)
0030          Q12(I,2)=JOB(INEW,4)
0031          RETURN
0032          END
```

```
0001          SUBROUTINE SEND23(NSW)
0002          IMPLICIT INTEGER(Q)
0003          INTEGER CT
0004          COMMON/TERM/CT
0005          COMMON/LAMBDA/LDELT(100),LQT(100)
0006          COMMON/BLK1/
             1 JOB(20,15), Q2(10,3), Q15(10,2), Q14(10,2), Q13(10,2),
             1 Q12(10,2), Q11(10,2), J2, J2T, J15, J15T, J14, J14T, J13, J13T,
             1 J12, J12T, J11, J11T, JN, KIN, KOUT, NS, NPTR, INEW,
             1 I13, I12, I11,
             1 SW10, SW16, SW17, SW18, SW546, SW445, SW346, SW245, SW146,
             1  SW547, SW548, SW549, SW13
0007          LOGICAL
             1 Q2AGE, GET2, LAST2, Q13AGE, Q12AGE, Q11AGE, LAST1, PR1AGE,
             1 PR2AGE, PR3AGE,
             1 SW10, SW16, SW17, SW18, SW546, SW445, SW346, SW245, SW146,
             1  SW547, SW548, SW549, SW13
0008          DO 1 I=1,10
0009          IF(Q13(I,1).EQ.0)GO TO 2
0010        1 CONTINUE
0011          WRITE(NPTR,301)
0012      301 FORMAT(' ','Q13 FULL')
0013          CT=LQT(1)
0014          RETURN
0015        2 IF(NSW.EQ.0)GO TO 5
0016          DO 3 N=1,20
0017          IF(JOB(N,1).EQ.J2)GO TO 4
0018        3 CONTINUE
0019          WRITE(NPTR,302)
0020      302 FORMAT(' ','FAULT IN SEND23')
0021          CT=LQT(1)
0022          RETURN
0023        4 JTIME=JOB(N,4)
0024          Q13(I,1)=J2
0025          Q13(I,2)=JTIME
0026          J2=0
0027          J2T=0
0028          RETURN
0029        5 Q13(I,1)=JOB(INEW,1)
0030          Q13(I,2)=JOB(INEW,4)
0031          RETURN
0032          END
```

```
0001          SUBROUTINE CREATE
0002          IMPLICIT INTEGER(Q)
0003          INTEGER CT
0004          COMMON/TERM/CT
0005          COMMON/LAMBDA/LDELT(100),LQT(100)
0006          COMMON/BLK1/
             1 JOB(20,15), Q2(10,3), Q15(10,2), Q14(10,2), Q13(10,2),
             1 Q12(10,2), Q11(10,2), J2, J2T, J15, J15T, J14, J14T, J13, J13T,
             1 J12, J12T, J11, J11T, JN, KIN, KOUT, NS, NPTR, INEW,
             1 I13, I12, I11,
             1 SW10, SW16, SW17, SW18, SW546, SW446, SW346, SW246, SW146,
             1  SW547, SW548, SW549, SW13
0007          LOGICAL
             1 Q2AGE, GET2, LAST2, Q13AGE, Q12AGE, Q11AGE, LAST1, PR1AGE,
             1 PR2AGE, PR3AGE,
             1 SW10, SW16, SW17, SW18, SW546, SW446, SW346, SW246, SW146,
             1  SW547, SW548, SW549, SW13
0008          DO 1 I=1,20
0009          IF(JOB(I,1).EQ.0)GO TO 2
0010        1 CONTINUE
0011          WRITE(NPTR,301)
0012      301 FORMAT(' ',' JOB ARRAY FULL')
0013          CT=LQT(1)
0014          RETURN
0015        2 KIN=KIN+1
0016          JOB(I,1)=KIN
0017          JOB(I,2)=LQT(1)
0018          NSEED=NS
0019          CALL ATIME(1.01, 3.99, 0.0, 20, VAL, NSEED)
0020          JOB(I,3)=VAL
0021          CALL ATIME( 9.0, 2.0, 0.0, 11, VAL,NSEED)
0022          IF(VAL.LE.1.)VAL=2.
0023          JOB(I,4)=VAL
0024          CALL ATIME( 9.0, 3.0, 0.0, 11, VAL,NSEED)
0025          IF(VAL.LE.1)VAL=2.
0026          JOB(I,5)=VAL
0027          CALL ATIME(0.0, 10.0, 0.0, 20, VAL,NSEED)
0028          NS=NSEED
0029          JOB(I,6)=1
0030          IF(VAL.GE.5.)JOB(I,6)=2
0031          INEW=I
0032          WRITE(NPTR,7001)KIN
0033     7001 FORMAT('1','INVENTORY AFTER CREATION OF JOB NO',I3)
0034          WRITE(NPTR,7003)
0035     7003 FORMAT('0','        JOB NO    ARRIVE TIME   PRIORITY',
            1            '  STA 1 TIME  STA 2 TIME   FIRST STA ')
0036          LOOK=20
0037     6003 IF(JOB(LOOK,1).NE.0)GO TO 6002
0038          LOOK=LOOK-1
0039          GO TO 6003
0040     6002 DO 6001 I=1,LOOK
0041          WRITE(NPTR,7002)(JOB(I,J),J=1,6)
0042     7002 FORMAT(6I12)
0043     6001 CONTINUE
0044          RETURN
0045          END
```

```
0001          SUBROUTINE REL(NJ)
0002          IMPLICIT INTEGER(Q)
0003          INTEGER CT
0004          COMMON/TERM/CT
0005          COMMON/LAMBDA/LDELT(100),LQT(100)
0006          COMMON/BLK1/
             1  JOB(20,15), Q2(10,3), Q15(10,2), Q14(10,2), Q13(10,2),
             1  Q12(10,2), Q11(10,2), J2, J2T, J15, J15T, J14, J14T, J13, J13T,
             1  J12, J12T, J11, J11T, JN, KIN, KOUT, NS, NPTR, INEW,
             1  I13, I12, I11,
             1  SW10, SW16, SW17, SW18, SW545, SW445, SW345, SW245, SW145,
             1   SW547, SW548, SW549, SW13
0007          LOGICAL
             1  Q2AGE, GET2, LAST2, Q13AGE, Q12AGE, Q11AGE, LAST1, PR1AGE,
             1  PR2AGE, PR3AGE,
             1  SW10, SW16, SW17, SW18, SW546, SW446, SW346, SW246, SW146,
             1   SW547, SW548, SW549, SW13
0008          DO 1 I=1,20
0009          IF(JOB(I,1).EQ.NJ)GO TO 2
0010        1 CONTINUE
0011          WRITE(NPTR,301)
0012      301 FORMAT(' ','ERROR IN REL')
0013          CT=LQT(1)
0014          RETURN
0015        2 CONTINUE
0016          IF(NJ.EQ.0)RETURN
0017          DO 3 J=1,15
0018          JOB(I,J)=0
0019        3 CONTINUE
0020          KOUT=KOUT+1
0021          WRITE(NPTR,7001)NJ
0022     7001 FORMAT('0','INVENTORY AFTER RELEASE OF JOB NO',I3)
0023          LOOK=20
0024     6003 IF(JOB(LOOK,1).NE.0)GO TO 6002
0025          LOOK=LOOK-1
0026          GO TO 6003
0027     6002 DO 6001 I=1,LOOK
0028          WRITE(NPTR,7002)(JOB(I,J),J=1,6)
0029     7002 FORMAT(6I12)
0030     6001 CONTINUE
0031          IF((KOUT.EQ.KIN).AND.(LQT(1).GT.150))CT=LQT(1)
0032          RETURN
0033          END
```

```
0001          SUBROUTINE WRITE
0002          IMPLICIT INTEGER(Q)
0003          INTEGER CT
0004          COMMON/TERM/CT
0005          COMMON/LAMBDA/LDELT(100),LQT(100)
0006          COMMON/BLK1/
             1  J03(20,15), Q2(10,3), Q15(10,2), Q14(10,2), Q13(10,2),
             1  Q12(10,2), Q11(10,2), J2, J2T, J15, J15T, J14, J14T, J13, J13T,
             1  J12, J12T, J11, J11T, JN, KIN, KOUT, NS, NPTR, INEW,
             1  I13, I12, I11,
             1  SW10, SW16, SW17, SW18, SW546, SW446, SW346, SW246, SW146,
             1   SW547, SW548, SW549, SW13
0007          LOGICAL
             1  Q2AGE, GET2, LAST2, Q13AGE, Q12AGE, Q11AGE, LAST1, PR1AGE,
             1  PR2AGE, PR3AGE,
             1  SW10, SW16, SW17, SW18, SW546, SW446, SW346, SW246, SW146,
             1   SW547, SW548, SW549, SW13
0008          WRITE(NPTR,7001)LQT(1)
0009     7001 FORMAT('0',    'SITUATION AT T =',I4//)
0010          WRITE(NPTR,7002)
0011     7002 FORMAT(' ',12X,'STA 2',48X,'STA 1')
0012          WRITE(NPTR,7003)
0013     7003 FORMAT(' ',32X,'PRIORITY 5     PRIORITY 4     PRIORITY 3',
             1          '     PRIORITY 2     PRIORITY 1 ')
0014          WRITE(NPTR,7004)
0015     7004 FORMAT(' ', 8X,'JOB NO  TIME',8X,5('   JOB NO  TIME') )
0016          WRITE(NPTR,7005)J2,J2T,J15,J15T,J14,J14T,J13,J13T,J12,J12T,J11,
             1     J11T
0017     7005 FORMAT('0',' SERVING',I4,I7,   8X,5(I8,I7)  //)
0018          WRITE(NPTR,7006)Q2(1,1),Q2(1,2),Q2(1,3),Q15(1,1),Q15(1,2),
             1  Q14(1,1),Q14(1,2),Q13(1,1),Q13(1,2),Q12(1,1),Q12(1,2),
             1  Q11(1,1),Q11(1,2)
0019     7006 FORMAT(' ',' QUEUED ',I4,I7,I7,I4, 5(I8,I7) )
0020          DO 6001 I=2,10
0021          WRITE(NPTR,7007)Q2(I,1),Q2(I,2),Q2(I,3),Q15(I,1),Q15(I,2),
             1  Q14(I,1),Q14(I,2),Q13(I,1),Q13(I,2),
             1  Q12(I,1),Q12(I,2),Q11(I,1),Q11(I,2)
0022     7007 FORMAT(' ',8X, I4,I7,I7,1X, 5(I8,I7))
0023     6001 CONTINUE
0024          WRITE(NPTR,7008)KIN,KOUT
0025     7008 FORMAT('0',8X,'JOBS IN =',I3,'    JOBS OUT =',I3)
0026          RETURN
0027          END
```

```
0001          BLOCK DATA
0002          IMPLICIT INTEGER(Q)
0003          COMMON /BLK2/ SW26,SW28,SW32,SW36,SW40
0004          COMMON/BLK1/
             1 J03(20,15), Q2(10,3), Q15(10,2), Q14(10,2), Q13(10,2),
             1 Q12(10,2), Q11(10,2), J2, J2T, J15, J15T, J14, J14T, J13, J13T,
             1 J12, J12T, J11, J11T, JN, KIN, KOUT, NS, NPTR, INEW,
             1 I13, I12, I11,
             1 SW10, SW16, SW17, SW18, SW546, SW446, SW346, SW246, SW146,
             1   SW547, SW548, SW549, SW13
0005          LOGICAL
             1 Q2AGE, GET2, LAST2, Q13AGE, Q12AGE, Q11AGE, LAST1, PR1AGE,
             1 PR2AGE, PR3AGE,
             1 SW10, SW16, SW17, SW18, SW546, SW446, SW346, SW246, SW146,
             1   SW547, SW548, SW549, SW13
0006          LOGICAL SW26,SW28,SW32,SW36,SW40
0007          DATA SW26/.TRUE./,SW28/.TRUE./,SW32/.TRUE./,SW36/.TRUE./,
             1     SW40/.TRUE./
0008          DATA
             1 J08/300*0/,
             1 Q2 /30 *0/,
             1 Q15/20 *0/,
             1 Q14/20 *0/,
             1 Q13/20 *0/,
             1 Q12/20 *0/,
             1 Q11/20 *0/,
             1 J2, J2T, J15, J15T, J14, J14T, J13, J13T, J12, J12T, J11, J11T
             1 / 0, 0, 0, 0, 0, 0, 0, 0, 0, 0, 0, 0 /,
             1 JN, KIN, KOUT, NS, NPTR, INEW, I13, I12, I11
             1 / 0, 0, 0, 1220703125, 6, 0, 0, 0, 0  /
0009          DATA
             1 SW10 /.FALSE./,
             1 SW16 /.FALSE./,
             1 SW17 /.FALSE./,
             1 SW18 /.FALSE./,
             1 SW546/.FALSE./,
             1 SW446/.FALSE./,
             1 SW346/.FALSE./,
             1 SW246/.FALSE./,
             1 SW146/.FALSE./,
             1 SW547/.FALSE./,
             1 SW548/.FALSE./,
             1 SW549/.FALSE./,
             1 SW13 /.FALSE./
0010          END
```

```
INVENTORY AFTER CREATION OF JOB NO  1

       JOB NO     ARRIVE TIME    PRIORITY  STA 1 TIME  STA 2 TIME    FIRST STA
        1             4            2           9          6             2

SITUATION AT T =    4

         STA 2                                                    STA 1
                                 PRIORITY 5     PRIORITY 4     PRIORITY 3     PRIORITY 2     PRIORITY 1
       JOB NO  TIME             JOB NO  TIME   JOB NO  TIME   JOB NO  TIME   JOB NO  TIME   JOB NO  TIME

 SERVING   0      0                0      0      0      0      0      0      0      0      0      0

 QUEUED    0      0      0         0      0      0      0      0      0      0      0      0      0
           0      0      0         0      0      0      0      0      0      0      0      0      0
           0      0      0         0      0      0      0      0      0      0      0      0      0
           0      0      0         0      0      0      0      0      0      0      0      0      0
           0      0      0         0      0      0      0      0      0      0      0      0      0
           0      0      0         0      0      0      0      0      0      0      0      0      0
           0      0      0         0      0      0      0      0      0      0      0      0      0
           0      0      0         0      0      0      0      0      0      0      0      0      0
           0      0      0         0      0      0      0      0      0      0      0      0      0
           0      0      0         0      0      0      0      0      0      0      0      0      0

       JOBS IN =   1     JOBS OUT =   0

SITUATION AT T =    6

         STA 2                                                    STA 1
                                 PRIORITY 5     PRIORITY 4     PRIORITY 3     PRIORITY 2     PRIORITY 1
       JOB NO  TIME             JOB NO  TIME   JOB NO  TIME   JOB NO  TIME   JOB NO  TIME   JOB NO  TIME

 SERVING   0      0                0      0      0      0      0      0      0      0      0      0

 QUEUED    1      6      0         0      0      0      0      0      0      0      0      0      0
           0      0      0         0      0      0      0      0      0      0      0      0      0
           0      0      0         0      0      0      0      0      0      0      0      0      0
           0      0      0         0      0      0      0      0      0      0      0      0      0
           0      0      0         0      0      0      0      0      0      0      0      0      0
           0      0      0         0      0      0      0      0      0      0      0      0      0
           0      0      0         0      0      0      0      0      0      0      0      0      0
           0      0      0         0      0      0      0      0      0      0      0      0      0
           0      0      0         0      0      0      0      0      0      0      0      0      0
           0      0      0         0      0      0      0      0      0      0      0      0      0

       JOBS IN =  1      JOBS OUT =   0
```

```
INVENTORY AFTER CREATION OF JOB NO  4

        JOB NO     ARRIVE TIME   PRIORITY  STA 1 TIME  STA 2 TIME   FIRST STA
          1            4            2          9           6           2
          2            8            1          8          11           2
          3           16            3          7          12           1
          4           20            1          8          12           2

SITUATION AT T =  20

           STA 2                                             STA 1
                                PRIORITY 5     PRIORITY 4     PRIORITY 3     PRIORITY 2     PRIORITY 1
        JOB NO  TIME           JOB NO  TIME   JOB NO  TIME   JOB NO  TIME   JOB NO  TIME   JOB NO  TIME

 SERVING    2    11                0      0       0      0       0      0       1      9       0      0


 QUEUED     0     0      0         0      0       0      0       3      7       0      0       0      0
            0     0      0         0      0       0      0       0      0       0      0       0      0
            0     0      0         0      0       0      0       0      0       0      0       0      0
            0     0      0         0      0       0      0       0      0       0      0       0      0
            0     0      0         0      0       0      0       0      0       0      0       0      0
            0     0      0         0      0       0      0       0      0       0      0       0      0
            0     0      0         0      0       0      0       0      0       0      0       0      0
            0     0      0         0      0       0      0       0      0       0      0       0      0
            0     0      0         0      0       0      0       0      0       0      0       0      0
            0     0      0         0      0       0      0       0      0       0      0       0      0

        JOBS IN =   4     JOBS OUT =  0

SITUATION AT T =  22

           STA 2                                             STA 1
                                PRIORITY 5     PRIORITY 4     PRIORITY 3     PRIORITY 2     PRIORITY 1
        JOB NO  TIME           JOB NO  TIME   JOB NO  TIME   JOB NO  TIME   JOB NO  TIME   JOB NO  TIME

 SERVING    2    11                0      0       0      0       3      7       1      9       0      0


 QUEUED     4    12      0         0      0       0      0       0      0       0      0       0      0
            0     0      0         0      0       0      0       0      0       0      0       0      0
            0     0      0         0      0       0      0       0      0       0      0       0      0
            0     0      0         0      0       0      0       0      0       0      0       0      0
            0     0      0         0      0       0      0       0      0       0      0       0      0
            0     0      0         0      0       0      0       0      0       0      0       0      0
            0     0      0         0      0       0      0       0      0       0      0       0      0
            0     0      0         0      0       0      0       0      0       0      0       0      0
            0     0      0         0      0       0      0       0      0       0      0       0      0
            0     0      0         0      0       0      0       0      0       0      0       0      0

        JOBS IN =   4     JOBS OUT =  0
```

```
INVENTORY AFTER CREATION OF JOB NO  2

        JOB NO     ARRIVE TIME     PRIORITY  STA 1 TIME  STA 2 TIME    FIRST STA
          1             4             2          9           6             2
          2             8             1          8          11             2

SITUATION AT T =    8

          STA 2                                                    STA 1
                                    PRIORITY 5     PRIORITY 4     PRIORITY 3     PRIORITY 2     PRIORITY 1
        JOB NO  TIME               JOB NO  TIME   JOB NO  TIME   JOB NO  TIME   JOB NO  TIME   JOB NO  TIME

 SERVING    1     6                   0      0      0      0      0      0      0      0      0      0

 QUEUED     0     0      0            0      0      0      0      0      0      0      0      0      0
            0     0      0            0      0      0      0      0      0      0      0      0      0
            0     0      0            0      0      0      0      0      0      0      0      0      0
            0     0      0            0      0      0      0      0      0      0      0      0      0
            0     0      0            0      0      0      0      0      0      0      0      0      0
            0     0      0            0      0      0      0      0      0      0      0      0      0
            0     0      0            0      0      0      0      0      0      0      0      0      0
            0     0      0            0      0      0      0      0      0      0      0      0      0
            0     0      0            0      0      0      0      0      0      0      0      0      0
            0     0      0            0      0      0      0      0      0      0      0      0      0

        JOBS IN =  2     JOBS OUT =  0

SITUATION AT T =   10

          STA 2                                                    STA 1
                                    PRIORITY 5     PRIORITY 4     PRIORITY 3     PRIORITY 2     PRIORITY 1
        JOB NO  TIME               JOB NO  TIME   JOB NO  TIME   JOB NO  TIME   JOB NO  TIME   JOB NO  TIME

 SERVING    1     6                   0      0      0      0      0      0      0      0      0      0

 QUEUED     2    11      0            0      0      0      0      0      0      0      0      0      0
            0     0      0            0      0      0      0      0      0      0      0      0      0
            0     0      0            0      0      0      0      0      0      0      0      0      0
            0     0      0            0      0      0      0      0      0      0      0      0      0
            0     0      0            0      0      0      0      0      0      0      0      0      0
            0     0      0            0      0      0      0      0      0      0      0      0      0
            0     0      0            0      0      0      0      0      0      0      0      0      0
            0     0      0            0      0      0      0      0      0      0      0      0      0
            0     0      0            0      0      0      0      0      0      0      0      0      0
            0     0      0            0      0      0      0      0      0      0      0      0      0

        JOBS IN =  2     JOBS OUT =  0

SITUATION AT T =   12

          STA 2                                                    STA 1
                                    PRIORITY 5     PRIORITY 4     PRIORITY 3     PRIORITY 2     PRIORITY 1
        JOB NO  TIME               JOB NO  TIME   JOB NO  TIME   JOB NO  TIME   JOB NO  TIME   JOB NO  TIME

 SERVING    1     6                   0      0      0      0      0      0      0      0      0      0

 QUEUED     2    11      0            0      0      0      0      0      0      0      0      0      0
```

```
INVENTORY AFTER CREATION OF JOB NO  5

        JOB NO    ARRIVE TIME    PRIORITY   STA 1 TIME   STA 2 TIME    FIRST STA
          1            4            2           9            6            2
          2            8            1           8           11            2
          3           16            3           7           12            1
          4           20            1           8           12            2
          5           25            2           7            4            1

SITUATION AT T =  26

             STA 2                                                  STA 1
                                  PRIORITY 5     PRIORITY 4      PRIORITY 3     PRIORITY 2      PRIORITY 1
        JOB NO  TIME             JOB NO  TIME   JOB NO  TIME    JOB NO  TIME   JOB NO  TIME    JOB NO  TIME

  SERVING   4     12                0      0       0      0        3      7       1      9        0      0


  QUEUED    0      0      0         0      0       0      0        0      0       5      7        2      8
            0      0      0         0      0       0      0        0      0       0      0        0      0
            0      0      0         0      0       0      0        0      0       0      0        0      0
            0      0      0         0      0       0      0        0      0       0      0        0      0
            0      0      0         0      0       0      0        0      0       0      0        0      0
            0      0      0         0      0       0      0        0      0       0      0        0      0
            0      0      0         0      0       0      0        0      0       0      0        0      0
            0      0      0         0      0       0      0        0      0       0      0        0      0
            0      0      0         0      0       0      0        0      0       0      0        0      0
            0      0      0         0      0       0      0        0      0       0      0        0      0

        JOBS IN =  5    JOBS OUT =  0

SITUATION AT T =  28

             STA 2                                                  STA 1
                                  PRIORITY 5     PRIORITY 4      PRIORITY 3     PRIORITY 2      PRIORITY 1
        JOB NO  TIME             JOB NO  TIME   JOB NO  TIME    JOB NO  TIME   JOB NO  TIME    JOB NO  TIME

  SERVING   4     12                0      0       0      0        0      0       1      9        0      0


  QUEUED    3     12      0         0      0       0      0        0      0       5      7        2      8
            0      0      0         0      0       0      0        0      0       0      0        0      0
            0      0      0         0      0       0      0        0      0       0      0        0      0
            0      0      0         0      0       0      0        0      0       0      0        0      0
            0      0      0         0      0       0      0        0      0       0      0        0      0
            0      0      0         0      0       0      0        0      0       0      0        0      0
            0      0      0         0      0       0      0        0      0       0      0        0      0
            0      0      0         0      0       0      0        0      0       0      0        0      0
            0      0      0         0      0       0      0        0      0       0      0        0      0
            0      0      0         0      0       0      0        0      0       0      0        0      0

        JOBS IN =  5    JOBS OUT =  0
```

```
INVENTORY AFTER CREATION OF JOB NO  6

        JOB NO    ARRIVE TIME   PRIORITY  STA 1 TIME  STA 2 TIME   FIRST STA
          1           4            2          9           6            2
          2           8            1          8          11            2
          3          16            3          7          12            1
          4          20            1          8          12            2
          5          25            2          7           4            1
          6          30            1          7           7            2

SITUATION AT T =  30

            STA 2                                                STA 1
                                 PRIORITY 5     PRIORITY 4     PRIORITY 3     PRIORITY 2     PRIORITY 1
        JOB NO  TIME            JOB NO  TIME   JOB NO  TIME   JOB NO  TIME   JOB NO  TIME   JOB NO  TIME

 SERVING   4     12               0      0      0       0      0       0      1       9      0       0

 QUEUED    3     12      0        0      0      0       0      0       0      5       7      2       8
           0      0      0        0      0      0       0      0       0      0       0      0       0
           0      0      0        0      0      0       0      0       0      0       0      0       0
           0      0      0        0      0      0       0      0       0      0       0      0       0
           0      0      0        0      0      0       0      0       0      0       0      0       0
           0      0      0        0      0      0       0      0       0      0       0      0       0
           0      0      0        0      0      0       0      0       0      0       0      0       0
           0      0      0        0      0      0       0      0       0      0       0      0       0
           0      0      0        0      0      0       0      0       0      0       0      0       0
           0      0      0        0      0      0       0      0       0      0       0      0       0

        JOBS IN =   6    JOBS OUT =  0

SITUATION AT T =  32

            STA 2                                                STA 1
                                 PRIORITY 5     PRIORITY 4     PRIORITY 3     PRIORITY 2     PRIORITY 1
        JOB NO  TIME            JOB NO  TIME   JOB NO  TIME   JOB NO  TIME   JOB NO  TIME   JOB NO  TIME

 SERVING   4     12               0      0      0       0      0       0      1       9      0       0

 QUEUED    6      7      0        0      0      0       0      0       0      5       7      2       8
           3     12      0        0      0      0       0      0       0      0       0      0       0
           0      0      0        0      0      0       0      0       0      0       0      0       0
           0      0      0        0      0      0       0      0       0      0       0      0       0
           0      0      0        0      0      0       0      0       0      0       0      0       0
           0      0      0        0      0      0       0      0       0      0       0      0       0
           0      0      0        0      0      0       0      0       0      0       0      0       0
           0      0      0        0      0      0       0      0       0      0       0      0       0
           0      0      0        0      0      0       0      0       0      0       0      0       0
           0      0      0        0      0      0       0      0       0      0       0      0       0

        JOBS IN =   6    JOBS OUT =  0

INVENTORY AFTER RELEASE OF JOB NO  1
          0           0            0          0           0            0
          2           8            1          8          11            2
          3          16            3          7          12            1
          4          20            1          8          12            2
          5          25            2          7           4            1
          6          30            1          7           7            2
```

```
INVENTORY AFTER CREATION OF JOB NO  7

          JOB NO     ARRIVE TIME    PRIORITY  STA 1 TIME  STA 2 TIME   FIRST STA
            7            34            1          11          12           2
            2             8            1           8          11           2
            3            16            3           7          12           1
            4            20            1           8          12           2
            5            25            2           7           4           1
            6            30            1           7           7           2

SITUATION AT T =  34.

               STA 2                                                  STA 1
                                     PRIORITY 5     PRIORITY 4     PRIORITY 3     PRIORITY 2     PRIORITY 1
          JOB NO  TIME              JOB NO  TIME   JOB NO  TIME   JOB NO  TIME   JOB NO  TIME   JOB NO  TIME

 SERVING    4      12                  0      0      0      0      0      0      0      0      0      0

 QUEUED     6       7       0          0      0      0      0      0      0      5      7      2      8
            3      12       0          0      0      0      0      0      0      0      0      0      0
            0       0       0          0      0      0      0      0      0      0      0      0      0
            0       0       0          0      0      0      0      0      0      0      0      0      0
            0       0       0          0      0      0      0      0      0      0      0      0      0
            0       0       0          0      0      0      0      0      0      0      0      0      0
            0       0       0          0      0      0      0      0      0      0      0      0      0
            0       0       0          0      0      0      0      0      0      0      0      0      0
            0       0       0          0      0      0      0      0      0      0      0      0      0
            0       0       0          0      0      0      0      0      0      0      0      0      0

          JOBS IN =  7    JOBS OUT =  1

SITUATION AT T =  36

               STA 2                                                  STA 1
                                     PRIORITY 5     PRIORITY 4     PRIORITY 3     PRIORITY 2     PRIORITY 1
          JOB NO  TIME              JOB NO  TIME   JOB NO  TIME   JOB NO  TIME   JOB NO  TIME   JOB NO  TIME

 SERVING    4      12                  0      0      0      0      0      0      5      7      0      0

 QUEUED     6       7       0          0      0      0      0      0      0      0      0      2      8
            3      12       0          0      0      0      0      0      0      0      0      0      0
            7      12       0          0      0      0      0      0      0      0      0      0      0
            0       0       0          0      0      0      0      0      0      0      0      0      0
            0       0       0          0      0      0      0      0      0      0      0      0      0
            0       0       0          0      0      0      0      0      0      0      0      0      0
            0       0       0          0      0      0      0      0      0      0      0      0      0
            0       0       0          0      0      0      0      0      0      0      0      0      0
            0       0       0          0      0      0      0      0      0      0      0      0      0
            0       0       0          0      0      0      0      0      0      0      0      0      0

          JOBS IN =  7    JOBS OUT =  1
```

```
INVENTORY AFTER CREATION OF JOB NO  8

          JOB NO     ARRIVE TIME    PRIORITY   STA 1 TIME   STA 2 TIME    FIRST STA
            7            34             1          11           12            2
            2             8             1           8           11            2
            3            16             3           7           12            1
            4            20             1           8           12            2
            5            25             2           7            4            1
            6            30             1           7            7            2
            8            37             3           9            9            1

SITUATION AT T =  38

          STA 2                                                    STA 1
                                  PRIORITY 5     PRIORITY 4     PRIORITY 3     PRIORITY 2     PRIORITY 1
        JOB NO  TIME             JOB NO  TIME   JOB NO  TIME   JOB NO  TIME   JOB NO  TIME   JOB NO  TIME

 SERVING   0      0                 0      0       0      0       0      0       5      7       0      0

 QUEUED    6      7      0          0      0       0      0       8      9       0      0       2      8
           3     12      0          0      0       0      0       0      0       0      0       4      8
           7     12      0          0      0       0      0       0      0       0      0       0      0
           0      0      0          0      0       0      0       0      0       0      0       0      0
           0      0      0          0      0       0      0       0      0       0      0       0      0
           0      0      0          0      0       0      0       0      0       0      0       0      0
           0      0      0          0      0       0      0       0      0       0      0       0      0
           0      0      0          0      0       0      0       0      0       0      0       0      0
           0      0      0          0      0       0      0       0      0       0      0       0      0
           0      0      0          0      0       0      0       0      0       0      0       0      0

        JOBS IN =  8     JOBS OUT =  1

SITUATION AT T =  40

          STA 2                                                    STA 1
                                  PRIORITY 5     PRIORITY 4     PRIORITY 3     PRIORITY 2     PRIORITY 1
        JOB-NO  TIME             JOB NO  TIME   JOB NO  TIME   JOB NO  TIME   JOB NO  TIME   JOB NO  TIME

 SERVING   6      7                 0      0       0      0       0      0       5      7       0      0

 QUEUED    3     12      0          0      0       0      0       8      9       0      0       2      8
           7     12      0          0      0       0      0       0      0       0      0       4      8
           0      0      0          0      0       0      0       0      0       0      0       0      0
           0      0      0          0      0       0      0       0      0       0      0       0      0
           0      0      0          0      0       0      0       0      0       0      0       0      0
           0      0      0          0      0       0      0       0      0       0      0       0      0
           0      0      0          0      0       0      0       0      0       0      0       0      0
           0      0      0          0      0       0      0       0      0       0      0       0      0
           0      0      0          0      0       0      0       0      0       0      0       0      0
           0      0      0          0      0       0      0       0      0       0      0       0      0

        JOBS IN =  8     JOBS OUT =  1
```

```
SERVING   6     7             0      0      0      0      0      0      0      0      0      0

QUEUED    5     4      0      0      0      0      0      8      9      0      0      2      8
          3    12      0      0      0      0      0      0      0      0      0      4      8
          7    12      0      0      0      0      0      0      0      0      0      0      0
          0     0      0      0      0      0      0      0      0      0      0      0      0
          0     0      0      0      0      0      0      0      0      0      0      0      0
          0     0      0      0      0      0      0      0      0      0      0      0      0
          0     0      0      0      0      0      0      0      0      0      0      0      0
          0     0      0      0      0      0      0      0      0      0      0      0      0
          0     0      0      0      0      0      0      0      0      0      0      0      0
          0     0      0      0      0      0      0      0      0      0      0      0      0

      JOBS IN =  8     JOBS OUT =  1

 SITUATION AT T =  44

          STA 2                                                  STA 1
                                PRIORITY 5    PRIORITY 4    PRIORITY 3    PRIORITY 2    PRIORITY 1
      JOB NO  TIME             JOB NO  TIME  JOB NO  TIME  JOB NO  TIME  JOB NO  TIME  JOB NO  TIME

SERVING   6     7             0      0      0      0      8      9      0      0      0      0

QUEUED    5     4      0      0      0      2      8      0      0      0      0      4      8
          3    12      0      0      0      0      0      0      0      0      0      0      0
          7    12      0      0      0      0      0      0      0      0      0      0      0
          0     0      0      0      0      0      0      0      0      0      0      0      0
          0     0      0      0      0      0      0      0      0      0      0      0      0
          0     0      0      0      0      0      0      0      0      0      0      0      0
          0     0      0      0      0      0      0      0      0      0      0      0      0
          0     0      0      0      0      0      0      0      0      0      0      0      0
          0     0      0      0      0      0      0      0      0      0      0      0      0
          0     0      0      0      0      0      0      0      0      0      0      0      0

      JOBS IN =  8     JOBS OUT =  1

 SITUATION AT T =  46

          STA 2                                                  STA 1
                                PRIORITY 5    PRIORITY 4    PRIORITY 3    PRIORITY 2    PRIORITY 1
      JOB NO  TIME             JOB NO  TIME  JOB NO  TIME  JOB NO  TIME  JOB NO  TIME  JOB NO  TIME

SERVING   0     0             0      0      2      8      8      9      0      0      0      0

QUEUED    5     4      0      0      0      0      0      0      0      0      0      4      8
          3    12      0      0      0      0      0      0      0      0      0      5      7
          7    12      0      0      0      0      0      0      0      0      0      0      0
          0     0      0      0      0      0      0      0      0      0      0      0      0
          0     0      0      0      0      0      0      0      0      0      0      0      0
          0     0      0      0      0      0      0      0      0      0      0      0      0
          0     0      0      0      0      0      0      0      0      0      0      0      0
          0     0      0      0      0      0      0      0      0      0      0      0      0
          0     0      0      0      0      0      0      0      0      0      0      0      0
          0     0      0      0      0      0      0      0      0      0      0      0      0

      JOBS IN =  8     JOBS OUT =  1
```

```
INVENTORY AFTER CREATION OF JOB NO  9

       JOB NO    ARRIVE TIME   PRIORITY  STA 1 TIME  STA 2 TIME   FIRST STA
         7           34           1          11          12           2
         2            8           1           8          11           2
         3           16           3           7          12           1
         4           20           1           8          12           2
         5           25           2           7           4           1
         6           30           1           7           7           2
         8           37           3           9           9           1
         9           49           1           9          12           1

SITUATION AT T =  50

          STA 2                                                  STA 1
                                PRIORITY 5     PRIORITY 4     PRIORITY 3     PRIORITY 2     PRIORITY 1
      JOB NO  TIME              JOB NO  TIME   JOB NO  TIME   JOB NO  TIME   JOB NO  TIME   JOB NO  TIME

 SERVING   5     4                0      0       2      8       8      9       0      0       0      0


 QUEUED    3    12     1          0      0       0      0       0      0       0      0       4      8
           7    12     0          0      0       0      0       0      0       0      0       6      7
           0     0     0          0      0       0      0       0      0       0      0       9      9
           0     0     0          0      0       0      0       0      0       0      0       0      0
           0     0     0          0      0       0      0       0      0       0      0       0      0
           0     0     0          0      0       0      0       0      0       0      0       0      0
           0     0     0          0      0       0      0       0      0       0      0       0      0
           0     0     0          0      0       0      0       0      0       0      0       0      0
           0     0     0          0      0       0      0       0      0       0      0       0      0
           0     0     0          0      0       0      0       0      0       0      0       0      0

       JOBS IN =  9    JOBS OUT =  1

INVENTORY AFTER RELEASE OF JOB NO  5
         7           34           1          11          12           2
         2            8           1           8          11           2
         3           16           3           7          12           1
         4           20           1           8          12           2
         0            0           0           0           0           0
         6           30           1           7           7           2
         8           37           3           9           9           1
         9           49           1           9          12           1

SITUATION AT T =  52

          STA 2                                                  STA 1
                                PRIORITY 5     PRIORITY 4     PRIORITY 3     PRIORITY 2     PRIORITY 1
      JOB NO  TIME              JOB NO  TIME   JOB NO  TIME   JOB NO  TIME   JOB NO  TIME   JOB NO  TIME

 SERVING   3    12                0      0       2      8       8      9       0      0       0      0


 QUEUED    7    12     0          0      0       0      0       0      0       0      0       4      8
           0     0     0          0      0       0      0       0      0       0      0       6      7
           0     0     0          0      0       0      0       0      0       0      0       9      9
           0     0     0          0      0       0      0       0      0       0      0       0      0
           0     0     0          0      0       0      0       0      0       0      0       0      0
           0     0     0          0      0       0      0       0      0       0      0       0      0
           0     0     0          0      0       0      0       0      0       0      0       0      0
           0     0     0          0      0       0      0       0      0       0      0       0      0
```

```
INVENTORY AFTER CREATION OF JOB NO 10

          JOB NO      ARRIVE TIME     PRIORITY   STA 1 TIME   STA 2 TIME    FIRST STA
            7             34             1           11           12            2
            2              8             1            8           11            2
            3             16             3            7           12            1
            4             20             1            8           12            2
           10             53             1            9           10            1
            6             30             1            7            7            2
            8             37             3            9            9            1
            9             49             1            9           12            1

INVENTORY AFTER RELEASE OF JOB NO  2
            7             34             1           11           12            2
            0              0             0            0            0            0
            3             16             3            7           12            1
            4             20             1            8           12            2
           10             53             1            9           10            1
            6             30             1            7            7            2
            8             37             3            9            9            1
            9             49             1            9           12            1

SITUATION AT T =  54

             STA 2                                                   STA 1
                                      PRIORITY 5     PRIORITY 4     PRIORITY 3     PRIORITY 2     PRIORITY 1
          JOB NO  TIME                JOB NO  TIME   JOB NO  TIME   JOB NO  TIME   JOB NO  TIME   JOB NO  TIME

  SERVING    3     12                    0      0      0      0       8      9       0      0       0      0

  QUEUED     7     12       0            0      0      0      0       0      0       0      0       4      8
             0      0       0            0      0      0      0       0      0       0      0       6      7
             0      0       0            0      0      0      0       0      0       0      0       9      9
             0      0       0            0      0      0      0       0      0       0      0      10      9
             0      0       0            0      0      0      0       0      0       0      0       0      0
             0      0       0            0      0      0      0       0      0       0      0       0      0
             0      0       0            0      0      0      0       0      0       0      0       0      0
             0      0       0            0      0      0      0       0      0       0      0       0      0
             0      0       0            0      0      0      0       0      0       0      0       0      0
             0      0       0            0      0      0      0       0      0       0      0       0      0

          JOBS IN = 10    JOBS OUT =  3

SITUATION AT T =  56

             STA 2                                                   STA 1
                                      PRIORITY 5     PRIORITY 4     PRIORITY 3     PRIORITY 2     PRIORITY 1
          JOB NO  TIME                JOB NO  TIME   JOB NO  TIME   JOB NO  TIME   JOB NO  TIME   JOB NO  TIME

  SERVING    3     12                    0      0      0      0       8      9       0      0       0      0

  QUEUED     7     12       0            0      0      4      8       0      0       0      0       6      7
             0      0       0            0      0      0      0       0      0       0      0       9      9
             0      0       0            0      0      0      0       0      0       0      0      10      9
             0      0       0            0      0      0      0       0      0       0      0       0      0
             0      0       0            0      0      0      0       0      0       0      0       0      0
             0      0       0            0      0      0      0       0      0       0      0       0      0
             0      0       0            0      0      0      0       0      0       0      0       0      0
             0      0       0            0      0      0      0       0      0       0      0       0      0
```

```
INVENTORY AFTER CREATION OF JOB NO 11

        JOB NO      ARRIVE TIME    PRIORITY  STA 1 TIME  STA 2 TIME   FIRST STA
           7           34             1          11          12           2
          11           62             1           3           6           1
           3           16             3           7          12           1
           4           20             1           8          12           2
          10           53             1           9          10           1
           6           30             1           7           7           2
           8           37             3           9           9           1
           9           49             1           9          12           1

SITUATION AT T =  62


           STA 2                                                     STA 1
                                  PRIORITY 5     PRIORITY 4     PRIORITY 3     PRIORITY 2     PRIORITY 1
        JOB NO  TIME              JOB NO  TIME   JOB NO  TIME   JOB NO  TIME   JOB NO  TIME   JOB NO  TIM

 SERVING   3     12                 0      0       4      8       8      9       0      0       0      0


 QUEUED    7     12      0          0      0       0      0       0      0       0      0       6      7
           0      0      0          0      0       0      0       0      0       0      0       9      9
           0      0      0          0      0       0      0       0      0       0      0      10      9
           0      0      0          0      0       0      0       0      0       0      0       0      0
           0      0      0          0      0       0      0       0      0       0      0       0      0
           0      0      0          0      0       0      0       0      0       0      0       0      0
           0      0      0          0      0       0      0       0      0       0      0       0      0
           0      0      0          0      0       0      0       0      0       0      0       0      0
           0      0      0          0      0       0      0       0      0       0      0       0      0
           0      0      0          0      0       0      0       0      0       0      0       0      0

        JOBS IN = 11    JOBS OUT =  3

INVENTORY AFTER RELEASE OF JOB NO  3
           7           34             1          11          12           2
          11           62             1           3           6           1
           0            0             0           0           0           0
           4           20             1           8          12           2
          10           53             1           9          10           1
           6           30             1           7           7           2
           8           37             3           9           9           1
           9           49             1           9          12           1

SITUATION AT T =  64


           STA 2                                                     STA 1
                                  PRIORITY 5     PRIORITY 4     PRIORITY 3     PRIORITY 2     PRIORITY 1
        JOB NO  TIME              JOB NO  TIME   JOB NO  TIME   JOB NO  TIME   JOB NO  TIME   JOB NO  TIM

 SERVING   0      0                 0      0       4      8       8      9       0      0       0      0


 QUEUED    7     12      0          0      0       0      0       0      0       0      0       6      7
           0      0      0          0      0       0      0       0      0       0      0       9      9
           0      0      0          0      0       0      0       0      0       0      0      10      9
           0      0      0          0      0       0      0       0      0       0      0      11      3
           0      0      0          0      0       0      0       0      0       0      0       0      0
           0      0      0          0      0       0      0       0      0       0      0       0      0
           0      0      0          0      0       0      0       0      0       0      0       0      0
           0      0      0          0      0       0      0       0      0       0      0       0      0
```

```
INVENTORY AFTER CREATION OF JOB NO 12

        JOB NO     ARRIVE TIME    PRIORITY  STA 1 TIME  STA 2 TIME   FIRST STA
          7            34            1          11          12           2
         11            62            1           3           6           1
         12            78            1           6          12           1
          0             0            0           0           0           0
         10            53            1           9          10           1
          6            30            1           7           7           2
          8            37            3           9           9           1
          9            49            1           9          12           1

SITUATION AT T =  78

           STA 2                                                STA 1
                               PRIORITY 5      PRIORITY 4      PRIORITY 3      PRIORITY 2      PRIORITY 1
        JOB NO  TIME           JOB NO  TIME    JOB NO  TIME    JOB NO  TIME    JOB NO  TIME    JOB NO  TIME

 SERVING   0      0               8      6        6      7        0      0        0      0        0      0

 QUEUED    0      0       0       0      0        0      0        0      0        0      0        9      9
           0      0       0       0      0        0      0        0      0        0      0       10      9
           0      0       0       0      0        0      0        0      0        0      0       11      3
           0      0       0       0      0        0      0        0      0        0      0        7     11
           0      0       0       0      0        0      0        0      0        0      0        0      0
           0      0       0       0      0        0      0        0      0        0      0        0      0
           0      0       0       0      0        0      0        0      0        0      0        0      0
           0      0       0       0      0        0      0        0      0        0      0        0      0
           0      0       0       0      0        0      0        0      0        0      0        0      0
           0      0       0       0      0        0      0        0      0        0      0        0      0

        JOBS IN = 12    JOBS OUT =  5

SITUATION AT T =  80

           STA 2                                                STA 1
                               PRIORITY 5      PRIORITY 4      PRIORITY 3      PRIORITY 2      PRIORITY 1
        JOB NO  TIME           JOB NO  TIME    JOB NO  TIME    JOB NO  TIME    JOB NO  TIME    JOB NO  TIME

 SERVING   0      0               8      6        6      7        0      0        0      0        0      0

 QUEUED    0      0       0       0      0        7     11        0      0        0      0        9      9
           0      0       0       0      0        0      0        0      0        0      0       10      9
           0      0       0       0      0        0      0        0      0        0      0       11      3
           0      0       0       0      0        0      0        0      0        0      0       12      6
           0      0       0       0      0        0      0        0      0        0      0        0      0
           0      0       0       0      0        0      0        0      0        0      0        0      0
           0      0       0       0      0        0      0        0      0        0      0        0      0
           0      0       0       0      0        0      0        0      0        0      0        0      0
           0      0       0       0      0        0      0        0      0        0      0        0      0
           0      0       0       0      0        0      0        0      0        0      0        0      0

        JOBS IN = 12    JOBS OUT =  5
```

```
                               PRIORITY 5       PRIORITY 4       PRIORITY 3       PRIORITY 2       PRIORITY 1
      JOB NO  TIME            JOB NO  TIME     JOB NO  TIME     JOB NO  TIME     JOB NO  TIME     JOB NO  TIME

  SERVING  19     11              0      0        18      7         0      0         0      0         0      0


  QUEUED    0      0      0       0      0         0      0         0      0         0      0         0      0
            0      0      0       0      0         0      0         0      0         0      0         0      0
            0      0      0       0      0         0      0         0      0         0      0         0      0
            0      0      0       0      0         0      0         0      0         0      0         0      0
            0      0      0       0      0         0      0         0      0         0      0         0      0
            0      0      0       0      0         0      0         0      0         0      0         0      0
            0      0      0       0      0         0      0         0      0         0      0         0      0
            0      0      0       0      0         0      0         0      0         0      0         0      0
            0      0      0       0      0         0      0         0      0         0      0         0      0
            0      0      0       0      0         0      0         0      0         0      0         0      0

       JOBS IN = 19    JOBS OUT = 17

SITUATION AT T = 198


          STA 2.                                                 STA 1
                               PRIORITY 5       PRIORITY 4       PRIORITY 3       PRIORITY 2       PRIORITY 1
      JOB NO  TIME            JOB NO  TIME     JOB NO  TIME     JOB NO  TIME     JOB NO  TIME     JOB NO  TIME

  SERVING  19     11              0      0        18      7         0      0         0      0         0      0


  QUEUED    0      0      0       0      0         0      0         0      0         0      0         0      0
            0      0      0       0      0         0      0         0      0         0      0         0      0
            0      0      0       0      0         0      0         0      0         0      0         0      0
            0      0      0       0      0         0      0         0      0         0      0         0      0
            0      0      0       0      0         0      0         0      0         0      0         0      0
            0      0      0       0      0         0      0         0      0         0      0         0      0
            0      0      0       0      0         0      0         0      0         0      0         0      0
            0      0      0       0      0         0      0         0      0         0      0         0      0
            0      0      0       0      0         0      0         0      0         0      0         0      0
            0      0      0       0      0         0      0         0      0         0      0         0      0

       JOBS IN = 19    JOBS OUT = 17

INVENTORY AFTER RELEASE OF JOB NO 18
          0          0          0          0          0          0
          0          0          0          0          0          0
          0          0          0          0          0          0
          0          0          0          0          0          0
          0          0          0          0          0          0
          0          0          0          0          0          0
          0          0          0          0          0          0
          0          0          0          0          0          0
          0          0          0          0          0          0
          0          0          0          0          0          0
         19        121          2         12         11          1
```

```
SITUATION AT T = 200

          STA 2                                                       STA 1
                                   PRIORITY 5      PRIORITY 4      PRIORITY 3      PRIORITY 2      PRIORITY 1
       JOB NO   TIME              JOB NO   TIME   JOB NO   TIME   JOB NO   TIME   JOB NO   TIME   JOB NO   TIME

 SERVING  19      11                 0       0       0       0       0       0       0       0       0       0

 QUEUED    0       0       0         0       0       0       0       0       0       0       0       0       0
           0       0       0         0       0       0       0       0       0       0       0       0       0
           0       0       0         0       0       0       0       0       0       0       0       0       0
           0       0       0         0       0       0       0       0       0       0       0       0       0
           0       0       0         0       0       0       0       0       0       0       0       0       0
           0       0       0         0       0       0       0       0       0       0       0       0       0
           0       0       0         0       0       0       0       0       0       0       0       0       0
           0       0       0         0       0       0       0       0       0       0       0       0       0
           0       0       0         0       0       0       0       0       0       0       0       0       0
           0       0       0         0       0       0       0       0       0       0       0       0       0

       JOBS IN = 19     JOBS OUT = 18
SITUATION AT T = 202

          STA 2                                                       STA 1
                                   PRIORITY 5      PRIORITY 4      PRIORITY 3      PRIORITY 2      PRIORITY 1
       JOB NO   TIME              JOB NO   TIME   JOB NO   TIME   JOB NO   TIME   JOB NO   TIME   JOB NO   TIME

 SERVING  19      11                 0       0       0       0       0       0       0       0       0       0

 QUEUED    0       0       0         0       0       0       0       0       0       0       0       0       0
           0       0       0         0       0       0       0       0       0       0       0       0       0
           0       0       0         0       0       0       0       0       0       0       0       0       0
           0       0       0         0       0       0       0       0       0       0       0       0       0
           0       0       0         0       0       0       0       0       0       0       0       0       0
           0       0       0         0       0       0       0       0       0       0       0       0       0
           0       0       0         0       0       0       0       0       0       0       0       0       0
           0       0       0         0       0       0       0       0       0       0       0       0       0
           0       0       0         0       0       0       0       0       0       0       0       0       0
           0       0       0         0       0       0       0       0       0       0       0       0       0

       JOBS IN = 19     JOBS OUT = 18
INVENTORY AFTER RELEASE OF JOB NO 19
          0          0          0          0          0          0
```

BIBLIOGRAPHY

1. Anacker, W. and Wang, C. P. "Performance Evaluation of Computing Systems with Memory Hierarchies," IEEE Transactions of Electronic Computers, EC-16 (Dec. 1967), pp. 764-772.

2. Buxton, J. N., Editor. Simulation Programming Languages. North-Holland Publishing Company, Amsterdam, 1968.

3. Denning, P. J. "The Working Set Model for Program Behavior," Communications of the ACM, 11 (May 1968), pp. 323-333.

4. ENTELEK, Inc. Programmed Instruction in PERT/CPM. Newburyport, Mass., 1963.

5. Garver, D. P. and Lewis, P. A. W. "Probability Models for Buffer Storage Allocation Problems," Journal of Association for Computing Machinery, volume 18, (April 1971), pp. 186-198.

6. Gold, David. A Model for Linear Programming Optimization of I/O - Bound Programs (Master's Thesis). University of Illinois, Urbana, Illinois, Report No. 340, June 1969.

7. IBM System 360 Continuous System Modeling Program-Application Description. IBM Product Publications, Endicott, N. Y., 1971.

8. Kiviat, P. J., Colker, A., and Belkin, J. "GASP - A General Activity Simulation Program, "Simulation Languages-1965 Joint Automatic Control Conference, Instrument Society of America, Pittsburgh, Pennsylvania, 1965.

9. Kleinrock, L. "Time-Shared Systems: A Theoretical Treatment," Communications of the ACM, 14, (April 1967), pp. 242-261.

10. Lenahan, John J. System-State Model Theory and Implementation. The University of Houston, 1970.

BIBLIOGRAPHY (continued)

11. Lewis, P. A. W. and Shedler, G. S. "A Cyclic-Queue Model of System Overhead in Multiprogrammed Computer Systems, " Journal of Association for Computing Machinery, volume 18, (April 1971), pp. 199-220.

12. Lowe, Thomas C. "Analysis of Boolean Program Models for Time-Shared, Paged Environments," Communications of the ACM, 12, 4, (April 1969), pp. 199-205.

13. Mealy, G. H. "A Method of Synthesizing Sequential Circuits," BSTJ, 34, (Sept. 1955), pp. 1045-1079.

14. Minsky, Marvin Lee. Computation: Finite and Infinite Machines. Englewood Cliffs, N. J., P entice Hall, 1967.

15. Moore, E. F. "Gedanken-Experiments on Sequential Machines," Automata Studies, Annals of Math Studies, 34, (1956), pp. 129-153.

16. Parker, Robert O. "A Study of Downwind Vapor Travel for LNG Spills". A paper presented at the American Gas Association Distribution Conference, Seattle, Washington, May, 1970.

17. Sammet, J. E. "Roster of Programming Languages," Computers and Automation, volume 18, 30, (June 1969).

18. Scherr, A. L. An analysis of Time-Shared Computer Systems. MIT Press, Cambridge, Massachusetts, 1967.

19. Schriber, Thomas J. General Purpose Simulation System/360: Introductory Concepts and Case Studies. Ulrich's Books, Inc. Ann Arbor, Michigan, 1971.

20. Stephenson, Robert E. Computer Simulation for Engineers. Harcourt Brace Jovanovich, Inc. New York, New York, 1971.

21. Turing, A. M. "On Computable Numbers, with an Application to the Entscheidungs Problem," Proc. London Mathematical Society, Ser. 2-42, pp. 230-265.

22. Wyman, Forrest Paul. Simulation Modeling: a guide to using SIMSCRIPT. New York, Wiley (1970).