COMPUTER EVALUATION
OF SELECTED POWER SYSTEM
STABILIZER DESIGNS

A Thesis

Presented to the Faculty of

The Department of Electrical Engineering

University of Houston

In Partial Fulfillment

of the Requirements for the Degree

Master of Science in Electrical Engineering

---

by

Abhay K. Deshpande

April 1977

LIST OF FIGURES

LIST OF TABLES

ACKNOWLEDGEMENT

The author wishes to thank Professor Edgar C. Tacker of the Department of Electrical Engineering for his excellent guidance in planning and supervising this project. Without his help and encouragement this work could not have been completed.

Thanks are also due to Professors Charles W. Sanders and Thomas D. Linton for their valuable assistance.

Finally, the author is thankful to his parents for their encouragement during the years of his graduate study.

ABSTRACT

Dynamic stability problems of a generator connected to an infinite bus through a transmission line have been studied previously. In this thesis an analysis of this stability problem is undertaken using modern control techniques. A nonlinear model of the generator together with its automatic voltage regulator is obtained, and is then linearized about the operating point. Four different types of power system stabilizers are designed on the basis of this linearized model. Dynamic stabilizer designs have been proposed by industry people, and these designs will serve as a standard of comparison. Modern control theory is used herein to obtain other stabilizers. The effectiveness of these stabilizers is tested by subjecting the system to a pulse disturbance. Time responses of the state variables are then compared to those resulting from the use of a dynamic stabilizer. It is found that there is a definite improvement in terminal voltage and internal frequency damping when stabilizers based on modern control are implemented. Cost functions are also compared in order to more completely specify the overall performance of the stabilizers.

TABLE OF CONTENTS

Page

CHAPTER 1

INTRODUCTION

I. Thesis Objectives

This thesis deals with the design of power system stabilizers (PSS). The development of PSS was prompted by a need to improve the dynamic stability of interconnected power systems.

Imbalance between the generated and demanded reactive power results in bus voltage deviations. Recently, fast response automatic voltage regulators (AVRs) have been used to return the terminal voltage to within the specified tolerance instantaneously following a disturbance. It has been indicated in [1]* that the damping of power system swings may be hampered rather than aided by very fast response excitation systems. It was also demonstrated [1,2] that an excitation system could be employed to damp oscillations if the voltage regulator error signal is supplemented by an appropriate control signal.

In this thesis the feasibility of using modern control strategies to obtain the desired supplementary control signal has been explored. Basically two different types

*Square brackets are used to denote reference numbers.

of controllers are discussed. One is a dynamic controller in the form of lead-lag circuits using one of the state variables as the input. The second is a controller with constant gains using either all the state variables or estimates of all the state variables as input. The output is the (constrained) optimal control signal applied to the input of the AVR.

II. Background

The development of digital computers for transient stability studies of large power systems has led to a number of interesting developments. With modern computers it has been possible to include details of the exciters and voltage regulators. It was also possible to study system behavior for a longer time by using high speed computers. Some stability curves were found to diverge only after several oscillations, rather than on the first swing following a disturbance [2]. The voltage regulator was the chief contributor to this insufficient damping. Results of stability studies showed that a speed error signal applied to generators with static exciters would produce damping. Derivation of the equivalent rotor speed signal by measuring the frequency of the internal voltage (i.e., terminal voltage compensated for the quadrature reactance

drop) bypasses other measurement problems and yields a signal of sufficient high quality so that damping is effected.

The power system stabilizer designed in [1] uses this internal frequency as the only input. The first PSS developed therein is a combination of lead-lag circuits which can be thought of as a fixed structure controller with certain free parameters (gains and time constants). Frequency domain techniques are used in [1] to determine these parameters. This stabilizer has been redesigned in this thesis because Schleif's paper does not include sufficient details of the generator model and also does not use the IEEE standard exciter model [4]. The basic structure of their PSS has been retained but the optimum values of these parameters are obtained using a different approach [3]. This is done to be as fair as possible in comparing their results with PSS designed using the modern control approach.

III. Foreword

Theoretical development of the model structure is discussed in Chapter 2. A system of equations to mathematically describe the model is then developed. Chapter 3 presents the different control algorithms to be used in the design of PSS. Simulation results illustrating the performance of each of the PSS designs are given in Chapter 4. In Chapter 5, performance of each PSS is discussed and interpretations

of the results are given. Finally, in Chapter 6 some conclusions are drawn and suggestions for further research are made.

CHAPTER 2

MODEL STRUCTURE

I. The Excitation System Model

The excitation system considered herein is of the high initial response category which is defined by the IEEE [4] as one capable of reaching ceiling voltage in less than 0.05 seconds. The system is capable of equal ceiling voltage in the boost and buck directions, yielding fast control to increase or decrease field current from its normal value. Field current in the negative direction is not possible, and no forseeable operating condition would necessitate this capability. Physically, the excitation system consists of only static components. Excitation power is obtained from the generator terminals through suitable transformers. The power is rectified by stationary thyristor modules which deliver current to the field winding through collector rings. A solid-state regulator receives voltage, current, and auxiliary information from the main generators, and controls the thyristor firing pulses. Auxiliary equipment allows for manual operation and startup capability.

Benefits to be derived from a high initial response excitation system include the high exciter ceiling voltages and short response times which can be utilized to force the main generator field current rapidly to a new level. During system faults the generator voltage is forced to maintain a high level to aid in system stability. Also, the terminal voltage can be maintained at normal levels during overspeed or load rejection.

Per Unit System

For the development of the excitation system, it has been useful to establish a per unit voltage base. For the model described herein, one per unit generation is defined as the rated voltage. One per unit exciter output is that voltage required to produce rated generator voltage on the generator air gap line.

Transfer Function Model

Figure 2.1 is the block diagram of the excitation system used in the computer simulation studies. In order to have a satisfactory representation all of the significant transfer functions are included. The transfer functions of Figure 2.1 will now be described in detail. The first summing point compares the regulator reference with the generator terminal voltage e_t to determine the voltage error input to the regulator amplifier. The second summing point combines voltage error input with the

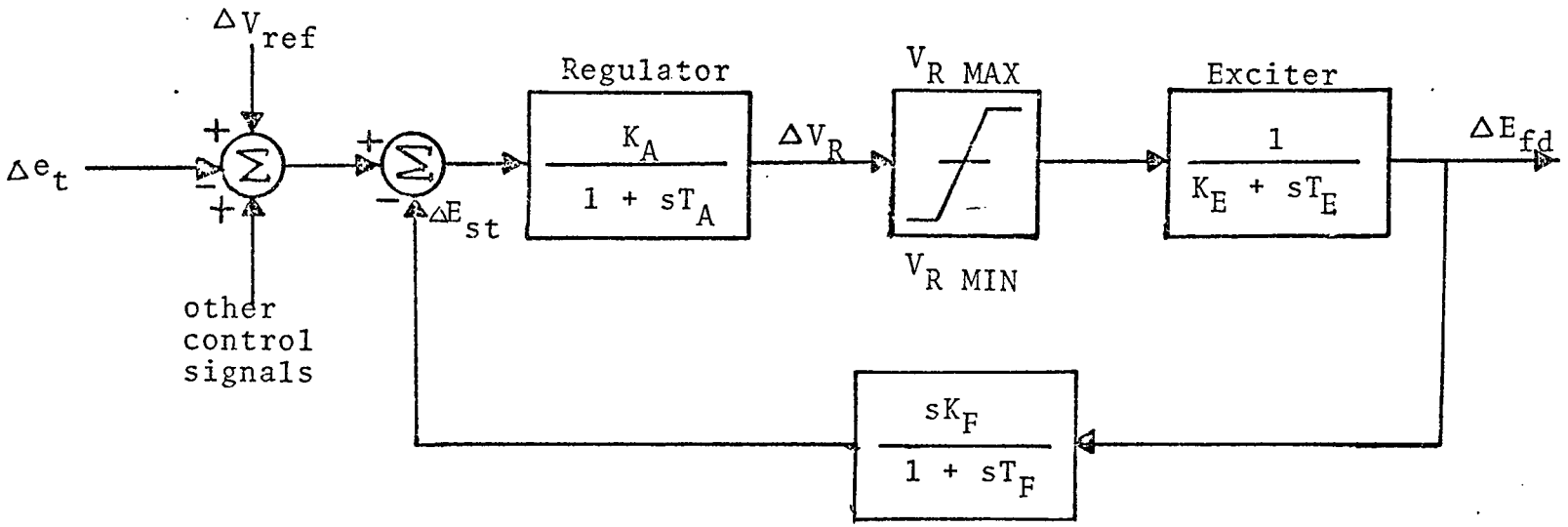

Fig.2.1 The excitation system model

excitation major damping loop signal. The regulator is characterized by a gain factor K_A and a time constant T_A. Following this, the maximum and minimum limits of the regulator are imposed so that large input error signals cannot produce a regulator output which exceeds practical limits. The next input/output relation is that of the exciter, approximated by $1/(K_E + sT_E)$. The saturation function of the exciter is neglected, as the operating point is such that the exciter does not saturate. The major damping loop signal is provided by the stabilizing transformer The transfer function $sK_F/(1 + sT_F)$ is used to model the input/output relation of this device. Appendix A gives the values of the constants of Fig. 2.1 actually used in the simulation.

II. The Generator and Tieline Model

A typical case of a synchronous generator connected to an infinite bus through an external reactance has been considered here. A nonlinear generator model is developed using direct and quadrature-axis representation with time constants given by Adkins [5], and simplifying assumptions made by Park [6]. Because only slow oscillations are studied, the transformer action between the direct and quadrature axes is assumed negligible. Armature resistance and saturation effects in both axes are neglected. No local loads are connected to the generator. Appendix A

presents the assumptions made and the pertinent equations used with the definitions of parameters included in the nonlinear generator model. Fig. 2.2 gives the complete exciter/nonlinear generator model connected to an infinite bus.

Following the analysis of deMello and Concordia [7], a linearized small perturbation model of the generator and tieline can be developed. A rigorous treatment, to obtain a linearized model from the nonlinear model, is given in Appendix B. The constants K_1 through K_6 of Fig. 2.3 are defined as follows:

$$K_1 = \left.\frac{\Delta P_e}{\Delta \delta}\right|_{Eq'}$$

change in electrical power for a change in rotor angle with constant flux linkages in the direct-axis.

$$K_2 = \left.\frac{\Delta P_e}{\Delta Eq'}\right|_{\delta}$$

change in electrical power for a change in direct-axis flux linkages with constant rotor angle.

$$K_3 = \frac{X_d' + X_e}{X_d + X_e}$$

$$K_4 = \frac{1}{K_3}\,\frac{\Delta Eq'}{\Delta \delta}$$

demagnetizing effect of a change in rotor angle.

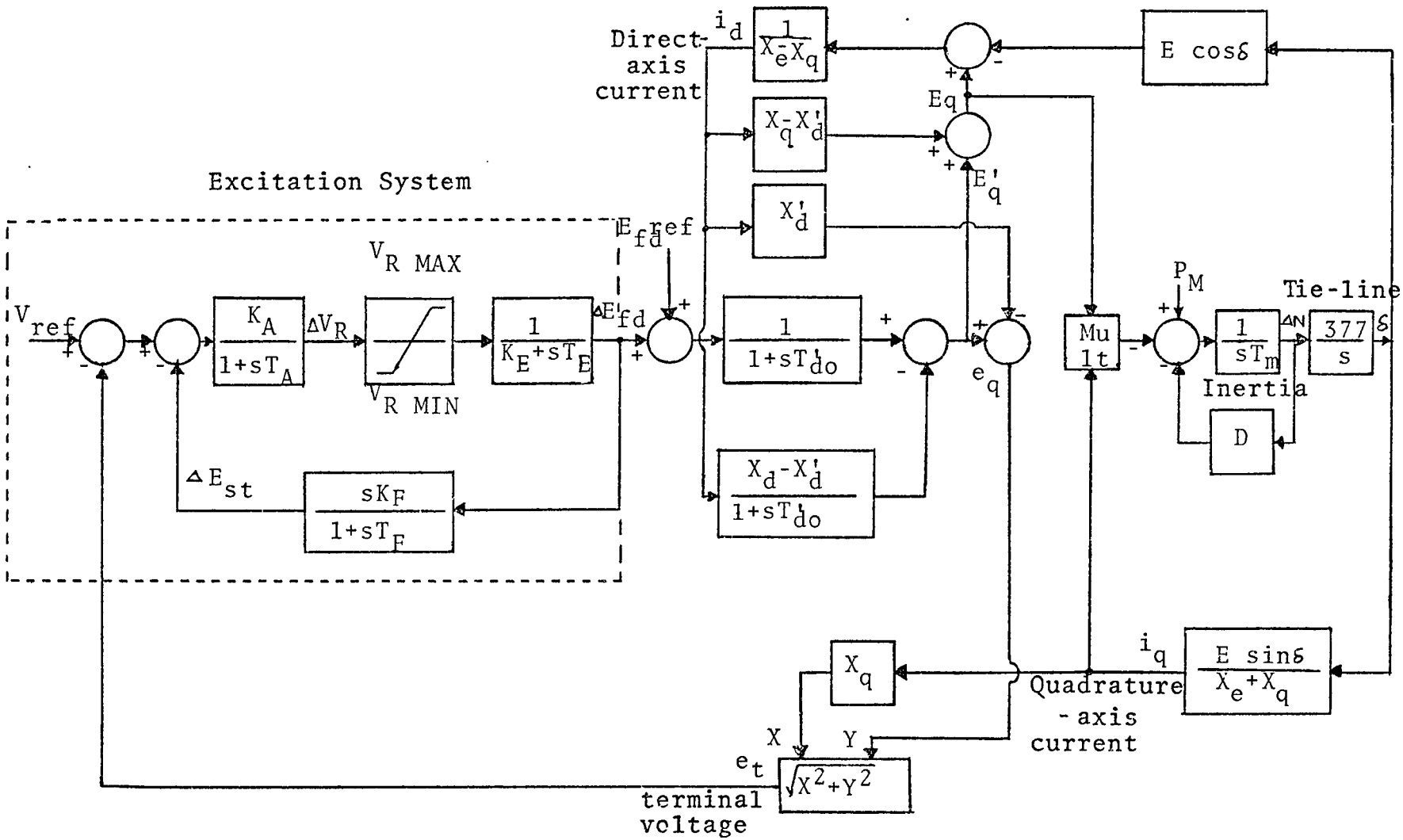

Fig 2.2 Combined model of exciter/nonlinear generator connected to an infinite bus.

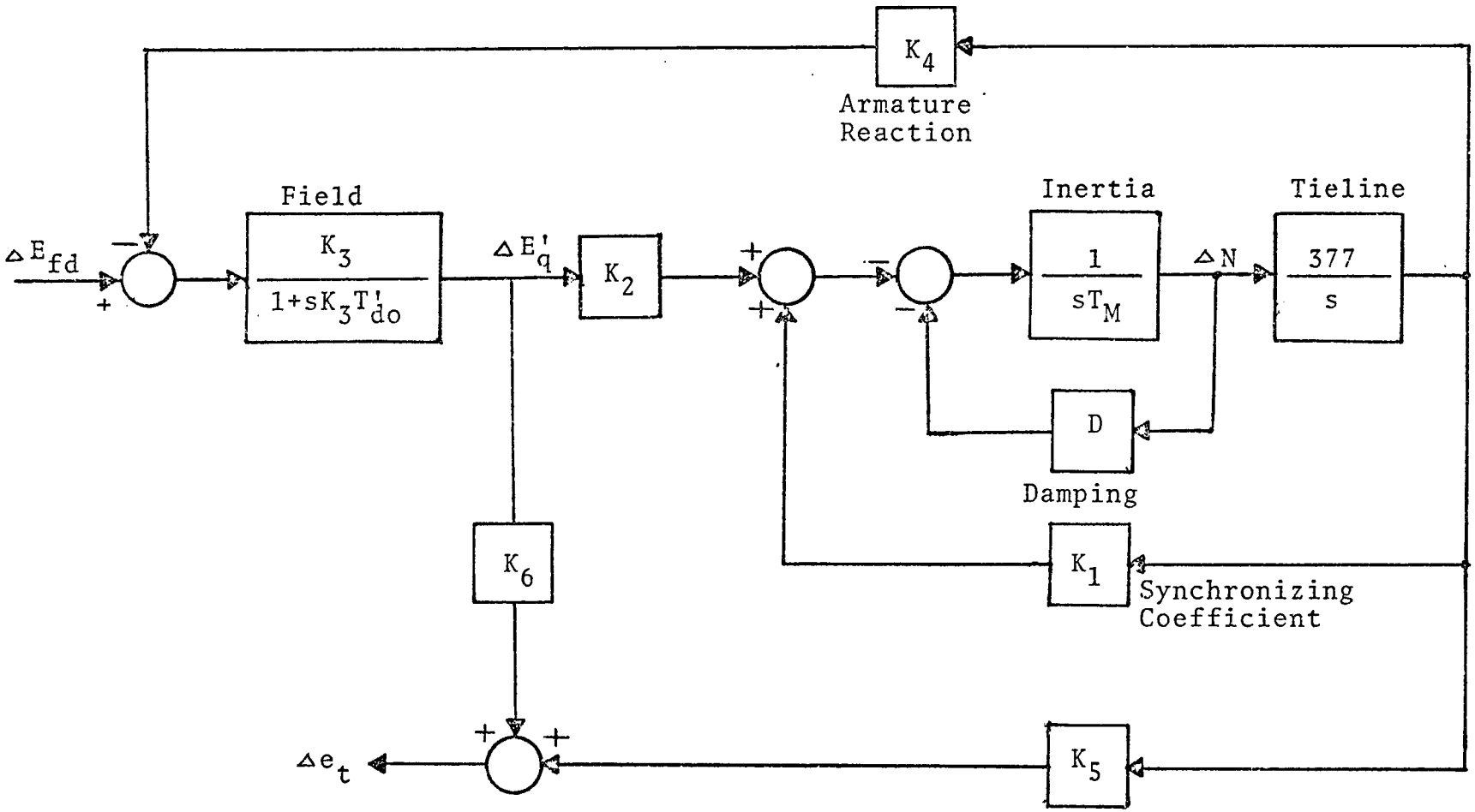

Fig.2.3 The linearized generator model

$K_5 = \left.\frac{\Delta e_t}{\Delta \delta}\right|_{Eq'}$ change in terminal voltage with change in rotor angle for constant Eq'.

$K_6 = \left.\frac{\Delta e_t}{\Delta Eq'}\right|_{\delta}$ change in terminal voltage with change in Eq' for constant rotor angle.

Some facts about the linear model given in Fig. 2.3 will now be given. $\frac{K_3}{(1+K_3T_{do}'s)}$ is the transfer function of the generator field and is determined by K_3 and the open-circuit time constant T_{do}'. The feedback gain D portrays the speed or frequency - dependent damping (such as load damping, friction, windage, etc.). The mechanical oscillations of the rotor of the synchronous machine are characterized by the fundamental oscillator formed by the synchronizing coefficient K_1, the inertia, and the tieline. The coefficient K_5, which may be positive or negative, is generally negative for machines prone to exhibit insufficient damping especially at operating points near full load.

The steady-state operating values of δ_o, Eq_o, E_o, e_{do} and e_{qo} are found by choosing real load current I_{po} = 1.0 p.u., reactive load current I_{qo} = 0.0, e_{to} = 1.0 p.u., and utilizing the equations in Appendix B. Values

of the constants K_1 through K_6 are then evaluated using the relations for these constants given in Appendix B. Appendix A presents the numerical values of the constants K_1 through K_6.

III. Formulation of the System Equations

The combined model of the exciter and linear generator shown in Fig. 2.4 can be modeled in the following state vector form:

$$\dot{x} = Ax+Bu+Dv \quad . \quad . \quad . \quad . \quad . \quad . \quad . \quad . \quad (2.1a)$$

where

$$x = \begin{bmatrix} x_1 \\ x_2 \\ x_3 \\ x_4 \\ x_5 \\ x_6 \end{bmatrix} = \begin{bmatrix} \Delta V_R \\ \Delta E_{fd} \\ \Delta E_{st} \\ \Delta e_t \\ \Delta N \\ \Delta \delta \end{bmatrix}$$

u is an input vector and $v = P_M$

It is now required to put the state variables of the system in the above standard form. From the block diagram of Fig 2.4, we have by inspection

$$x_1 = \left[\frac{K_A}{1 + s\,T_A}\right] (-x_3 - x_4 + u + \Delta V_{ref})$$

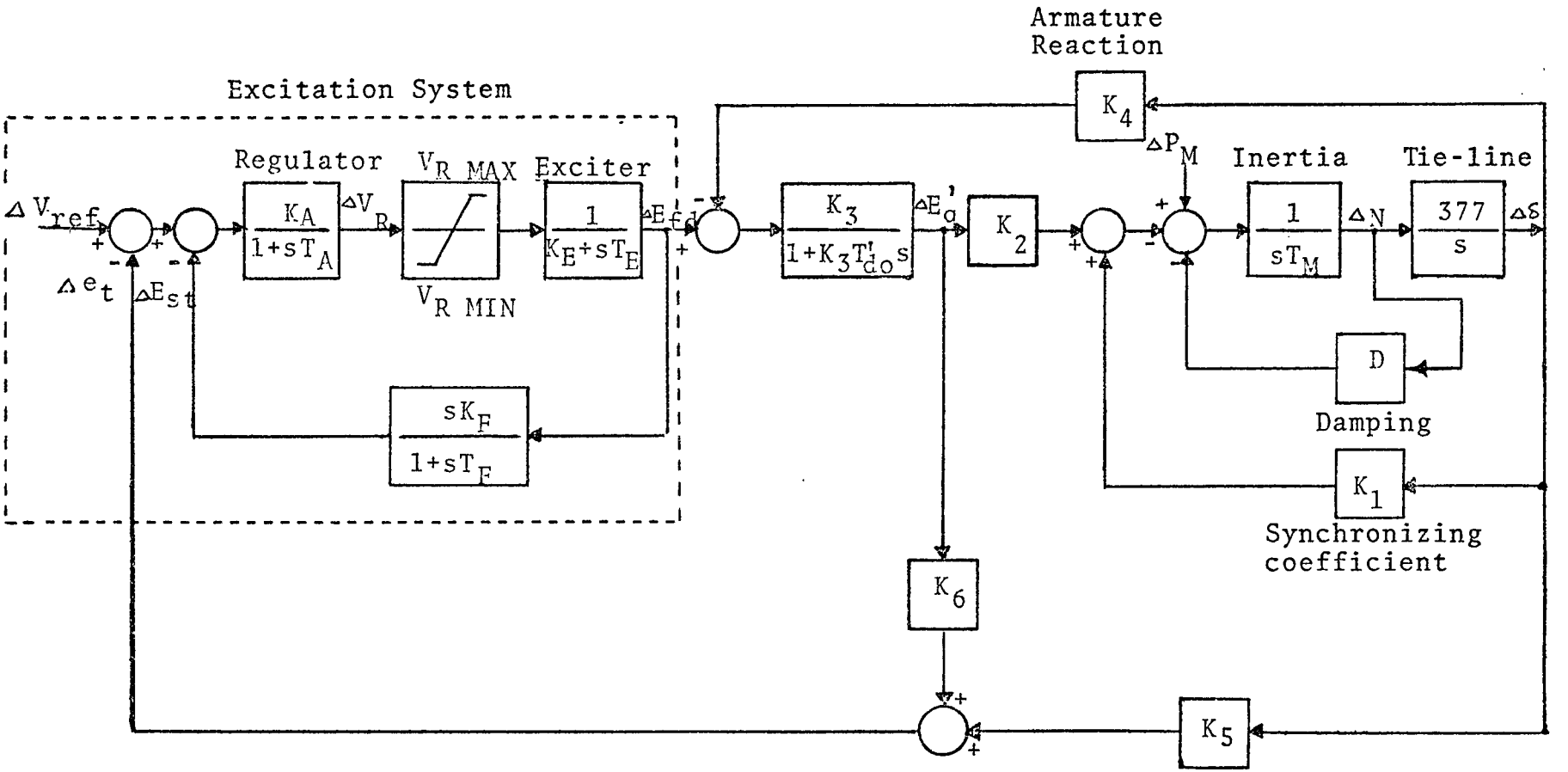

Fig.2.4 Combined model of the exciter and linear generator connected to an infinite bus.

$$x_2 = \left[\frac{1}{K_E + sT_E}\right] x_1$$

$$x_3 = \left[\frac{sK_F}{1 + sT_F}\right] x_2$$

$$\Delta E_q' = \left[\frac{K_3}{1 + sK_3T_{do}'}\right](x_2 - K_4x_6)$$

$$x_5 = \frac{1}{T_M s} \quad (\Delta P_M - Dx_5 - K_1x_6 - K_2\Delta E_q')$$

$$x_6 = \frac{377}{s} \quad x_5$$

By inverse Laplace transformation of the above equations, we obtain the following set of differential equations:

$$\dot{x}_1 = -\frac{x_1}{T_A} - \frac{K_A}{T_A} x_3 - \frac{K_A}{T_A} x_4 + \frac{K_A}{T_A} u + \frac{K_A}{T_A} V_{ref} \quad \ldots. (2.1)$$

$$\dot{x}_2 = \frac{1}{T_E} x_1 - \frac{K_E}{T_E} x_2 \quad (2.2)$$

$$\dot{x}_3 = -\frac{1}{T_F} x_3 - \frac{K_F K_E}{T_F T_E} x_2 + \frac{K_F}{T_F T_E} x_1 \quad (2.3)$$

$$\dot{x}_4 = \frac{K_6}{T_{do}'} x_2 - \frac{1}{K_3 T_{do}'} x_4 + 377K_5x_5 - \left(\frac{K_4K_6}{T_{do}'} - \frac{K_5}{K_3T_{do}'}\right) x_6 \quad \ldots. (2.4)$$

$$\dot{x}_5 = -\frac{K_2}{T_M K_6} x_4 - \frac{D}{T_M} x_5 + \left(\frac{K_2K_5}{K_6T_M} - \frac{K_1}{T_M}\right) x_6 + \frac{1}{T_M}\Delta P_M. \quad (2.5)$$

$$\dot{x}_6 = 377\ x_5 \quad (2.6)$$

In standard form, the equations are

$$\begin{bmatrix} \dot{x}_1 \\ \dot{x}_2 \\ \dot{x}_3 \\ \dot{x}_4 \\ \dot{x}_5 \\ \dot{x}_6 \end{bmatrix} = \begin{bmatrix} -\frac{1}{T_A} & 0 & -\frac{K_A}{T_A} & -\frac{K_A}{T_A} & 0 & 0 \\ -\frac{1}{T_E} & -\frac{K_E}{T_E} & 0 & 0 & 0 & 0 \\ \frac{K_F}{T_E T_F} & -\frac{K_F K_E}{T_F T_E} & -\frac{1}{T_F} & 0 & 0 & 0 \\ 0 & \frac{K_6}{T_{do}'} & 0 & -\frac{1}{K_3 T_{do}'} & 377K_5 & \frac{K_5}{K_3 T_{do}'} - \frac{K_4 K_6}{T_{do}'} \\ 0 & 0 & 0 & -\frac{K_2}{T_M K_6} & -\frac{D}{T_M} & \frac{K_2 K_5}{K_6 T_M} - \frac{K_1}{T_M} \\ 0 & 0 & 0 & 0 & 377. & 0 \end{bmatrix} \begin{bmatrix} x_1 \\ x_2 \\ x_3 \\ x_4 \\ x_5 \\ x_6 \end{bmatrix}$$

$$+ \begin{bmatrix} \frac{K_A}{T_A} \\ 0 \\ 0 \\ 0 \\ 0 \\ 0 \end{bmatrix} u + \begin{bmatrix} 0 \\ 0 \\ 0 \\ 0 \\ \frac{1}{T_M} \\ 0 \end{bmatrix} v$$

wherein A,B,and D are easily identified by comparison with(2.1a).

IV. The System Eigenstructure

The eigenvalues of the system* are shown in Fig. 2.5 It is clear that the open loop system is unstable since two of its eigenvalues are in the right-half of the complex plane. This instability can be explained using the concept of damping torque given in [7]. For this purpose consider the contribution coming through branch K_5 accounting for the effect of angle on terminal voltage. In Fig. 2.6 $\frac{-K_\epsilon}{1 + sT_\epsilon}$ represents the modified block diagram of the entire excitation system. The exact expression for ΔT_D due to a change in the angle and its effect on voltage is given by,

$$\frac{\Delta T_D}{\Delta \delta} = \frac{-K_2 K_5 K_\epsilon}{(1/K_3+K_\epsilon K_6)+s(T_\epsilon/K_3+T'_{do})+s^2 T'_{do} T}$$. Thus**

$$\frac{\Delta T_D}{\Delta \delta}(jw) = \frac{-K_2 K_5 K}{(1/K_3+K_\epsilon K_6)+jw(T_\epsilon/K_3+T'_{do})-w^2 T'_{do} T}$$

$$\Delta T_D = \frac{K_2 K_5 K (T_\epsilon/K_3+T'_{do}) w}{(1/K_3+K_\epsilon K_6-w^2 T'_{do} T)^2 + (T_\epsilon/K_3+T'_{do})^2 w^2} \Delta \delta$$

This component gives positive damping whenever K_5 is positive, but for a large number of cases K_5 is negative

---

* Using the parameter values given in Appendix A.

** Throughout this thesis w will be used to denote the imaginary part of the complex variable s ; i.e., $s = \sigma + jw$

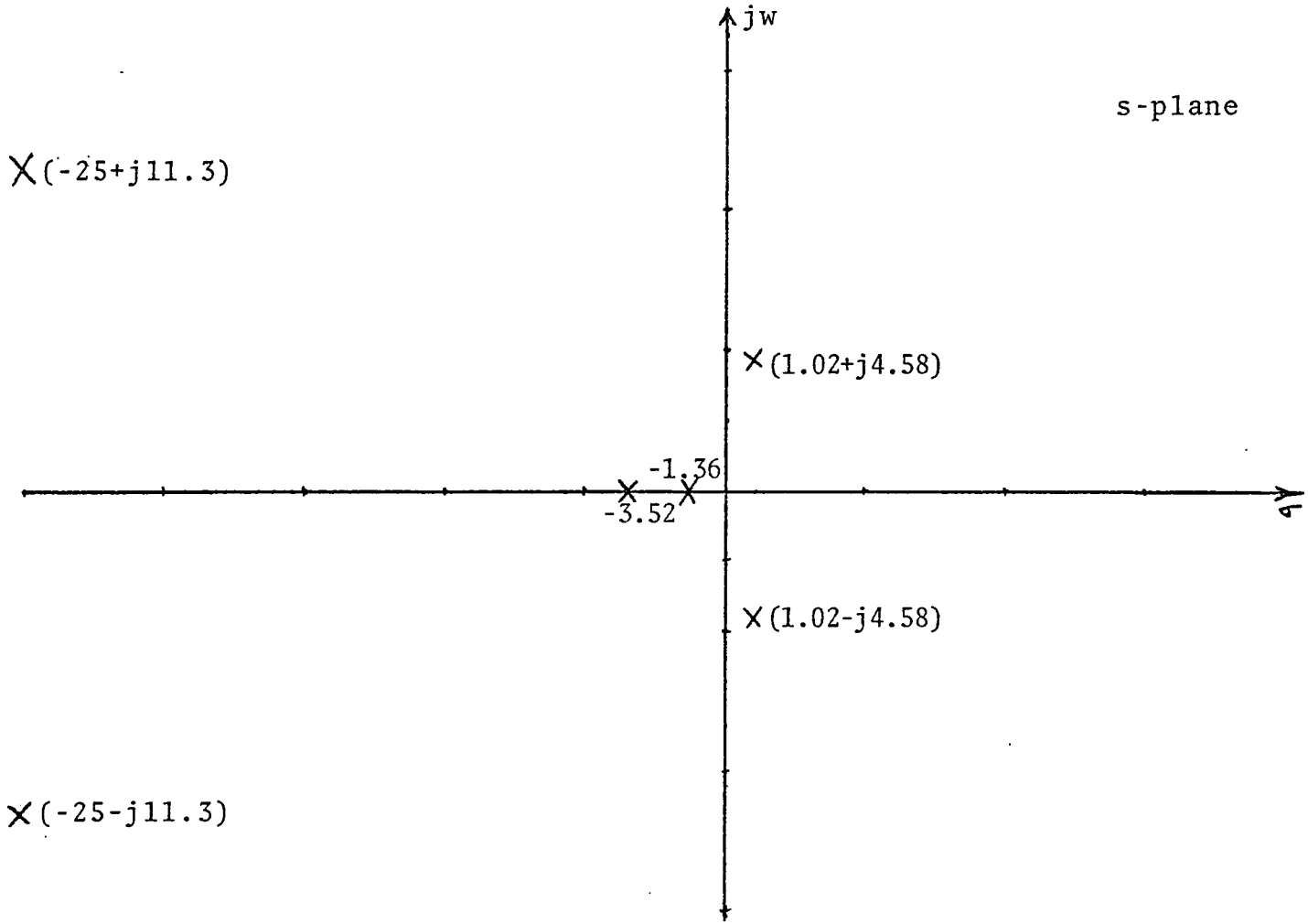

Fig. 2.5 The system eigenstructure

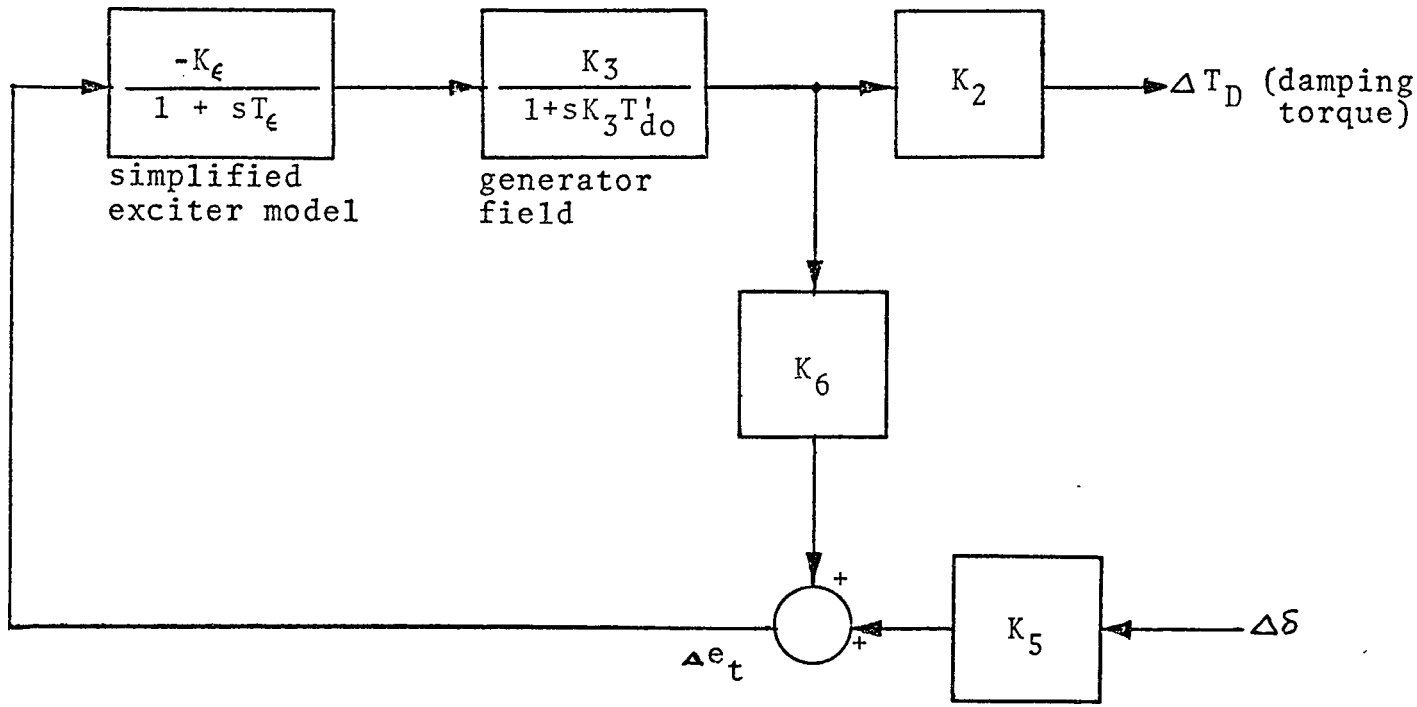

Fig. 2.6 An illustration of constant K_5 affecting the damping torque.

(especially for moderate-to-high system transfer impedance and heavy loading). In Section 2.II, I_{po}=1.0 p.u. and X_E= 1.0 p.u. were chosen corresponding to a heavily loaded generator and a very high system reactance. These two quantities make K_5 negative which in turn provides a negative damping torque. This negative damping torque plays a prominent role in making the open loop system unstable.

CHAPTER 3

DESIGN OF POWER SYSTEM STABILIZERS

In this chapter four different types of power system stabilizers are discussed. These stabilizers will be identified by Type I, II, III, and IV throughout the thesis. A full description of each of them is given below.

Stabilizer Type I	:	Dynamic stabilizer having the structure given in [1] (DS)
Stabilizer Type II	:	Deterministic optimal constant state feedback controller (DOFC)
Stabilizer Type III	:	Deterministic Observer with optimal controller (DOOC)
Stabilizer Type IV	:	Stochastic optimal controller (SOC)

This chapter is divided into four sections. Each section describes the algorithm used to develop one stabilizer.

I. Design of Dynamic Stabilizer (Lead-Lag Circuits) (DS)

This type of power system stabilizer has been designed in [1]. As mentioned in the introduction, [1] does not use the standard model of the exciter and the generator. In this section this type of stabilizer has

been redesigned using the standard excitation system model given in an IEEE Committee Report [4] and the generator model given by Concordia [7]. The basic structure of this PSS has been retained but optimum values of the parameters are obtained using a different approach.

The structure used in [1] is given by the transfer function,

$$G_{pss}(s) = \frac{G_p(1+T_1s)(1+T_2s)\ T_Rs}{(1+T_2s)(1+T_4s)(1+T_Rs)} \quad . \quad . \quad . \quad (3.1)$$

wherein the parameters G_p, T_1, T_2, T_3, T_4 and T_R are to be selected according to some design criteria. According to Schlief, $G_{pss}(s)$ is ideally designed with a leading phase characteristic which precisely cancels the phase lag of $G_R(s)$ in order that the product $G_{pss}(jw)\ G_R(jw)$ be positive and real throughout the spectrum of interest. $G_R(s)$ is defined as the closed-loop excitation system transfer function, i.e., $G_R(s) = \frac{\Delta E_q'}{\Delta V_{ref}}$. In other words, the entire effort of the PSS is devoted to providing positive damping torques if, and only if, the phase of the product $G_{pss}(jw)\ G_R(jw)$ is zero. The entire design of the PSS is based on frequency domain considerations, and local frequency deviations provide one of the inputs to the PSS. More details are given in Appendix C.

The optimal parameters for the above G_{pss} can also be found via time domain methods. The pattern search technique [3] is used here to determine the values of the design parameters. The total system including the original system and the stabilizer are of the form:

$$\dot{x} = Ax + Dv \quad . \quad . \quad . \quad . \quad . \quad . \quad . \quad . \quad . \quad . \quad . \quad . \quad . \quad . \quad . \quad . \quad . \quad . \quad . \quad (3.2)$$

where state variables x_1 through x_6 belong to the original system and state variables x_7 through x_9 to the stabilizer. A is the system matrix and D is the disturbance vector. The system equations are developed in Appendix C.

The cost functional to be used herein is given by,

$$J = \int_{t_o}^{t_f} [x_1^2 + x_2^2 + x_3^2 + x_4^2 + x_5^2 + x_6^2]dt \ . \quad (3.3)$$

Given the cost functional (3.3), the pattern search technique will search for a optimal set of parameter values of G_p, T_1, T_2, T_3, T_4 and T_R which minimizes (3.3). Appendix C gives more details of the pattern search technique. Fig. 3.1 shows the PSS designed in this section. Numerical values of the parameters are given in Appendix A. Performance of the system was checked by simulating the system with dynamic stabilizer and the results of this simulation are shown in Chapter 4.

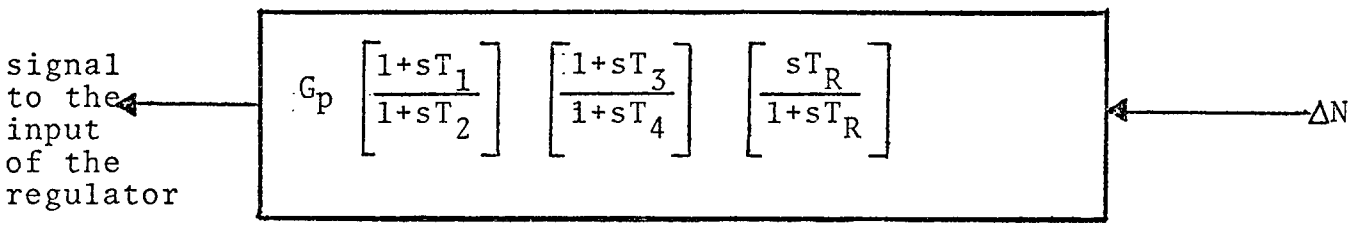

Fig. 3.1 Implementation of the dynamic stabilizer

II. Design of Optimal Constant Feedback Contoller (DOFC)

To design this type of controller all of the state variables should be available. Let the system, for which the optimal controller is to be designed be of the form

$$\dot{x}(t) = Ax(t) + Bu(t) \quad . \; . \; . \; . \; . \; . \; . \; . \; . \; . \; . \; . \; . \quad (3.4)$$

$$y(t) = Hx(t) \quad . \; . \; . \; . \; . \; . \; . \; . \; . \; . \; . \; . \; . \; . \; . \; . \quad (3.5)$$

where $x(t) \varepsilon E^n$ is the state of the system and $u(t) \varepsilon E^m$ and $y(t) \varepsilon E^p$ are the input and output of the system respectively. A, B and H are nxn, nxm and pxn matrices respectively, and are independent of time t. Matrices A, B and x(t) are defined in Section 2.III.

The cost functional which is to be minimized is given by*

$$J = \int_0^\infty [x^T(t)Qx(t) + u^T(t)Ru(t)]dt \quad . \; . \; . \; . \; . \; . \quad (3.6)$$

where Q is a positive semi-definite matrix of dimension (nxn) and R is a positive definite matrix of dimension (nxm). In the design, Q and R are chosen to be

---

* T denotes 'transpose'

$$Q = \begin{bmatrix} 1 & 0 & 0 & 0 & 0 & 0 \\ 0 & 1 & 0 & 0 & 0 & 0 \\ 0 & 0 & 1 & 0 & 0 & 0 \\ 0 & 0 & 0 & 1 & 0 & 0 \\ 0 & 0 & 0 & 0 & 1 & 0 \\ 0 & 0 & 0 & 0 & 0 & 1 \end{bmatrix}, \quad R = [1]$$

Problem Statement

Design a physically realizable control law $u = u(x(t))$ for the system (3.4) which minimizes the cost functional (3.6). The solution to this problem can be obtained [8,9] as follows:

$$u(t) = -Kx(t) \tag{3.7}$$

$$\text{where} \quad K = R^{-1}B^{T}P \tag{3.8}$$

and P is the solution of the algebric matrix Riccati equation

$$PA + A^{T}P + Q - PBR^{-1}B^{T}P = 0 \tag{3.9}$$

The performance of the system was checked by simulating the system with this type of controller. It was then required to improve the damping of state variables of the system. This can be achieved by increasing the system stability margin. The basic idea used here is to make the real parts of the eigenvalues of the closed-loop system less than a constant α , where $\alpha > 0$.

Linear Regulator Problem with a Prescribed Degree of Stability [9]

Let the system be given by:

$$\dot{x}(t) = Ax(t) + Bu(t) \quad . \; . \; . \; . \; . \; . \; . \; . \; . \quad (3.10)$$

where matrices A and B are same as given in II.A. The associated cost functional is,

$$J = \int_0^\infty e^{2\alpha t}[x^T(t)Qx(t) + u^T(t)Ru(t)]dt \quad . \; . \; . \; . \; . \quad (3.11)$$

wherein Q and R are given in II.A and the non-negative constant α, gives the desired minimum degree of stability of the closed-loop system. The minimization problem now becomes the task of finding the minimum value of the cost functional (3.11) and the associated optimal control.

Define

$$\hat{x}(t) = e^{\alpha t}x(t)$$

and

$$\hat{u}(t) = e^{\alpha t}u(t).$$

Differentation yields

$$\dot{\hat{x}}(t) = \alpha e^{\alpha t}x(t) + e^{\alpha t}\dot{x}(t)$$

$$= \alpha\hat{x}(t) + e^{\alpha t}Ax(t) + e^{\alpha t}Bu(t)$$

$$= (A+\alpha I)\hat{x}(t) + B\hat{u}(t) \quad . \; . \; . \; . \; . \; . \; . \; . \; . \; . \quad (3.12)$$

The initial state is defined by $\hat{x}(t_0) = e^{\alpha t_0}$. The integrand (3.11) in terms of new variables $\hat{x}(t)$ and $\hat{u}(t)$ becomes,

$$J = \int_0^\infty [\hat{x}^T(t)Q\hat{x}(t) + \hat{u}(t)R\hat{u}(t)]dt \quad . \; . \; . \; . \; . \; . \quad (3.13)$$

Hence the problem reduces to finding a control $\hat{u}(.)$ for the system (3.12) that minimizes the cost functional (3.13).

The solution to this problem can be obtained as

$$\hat{u}(t) = -K\hat{x}(t)$$

where $\quad K = R^{-1}B^T\overline{P}$

and $\overline{P}$ is the solution of the equation

$$\overline{P}(A+\alpha I) + (A^T+\alpha I)\overline{P} - PBR^{-1}B^T\overline{P} + Q = 0 \quad . \; . \; . \; . \quad (3.14)$$

For the system considered in this thesis, and choosing $\alpha = 0.25$, the new matrix $(A+\alpha I)$ becomes,

$$\begin{bmatrix} -49.75 & 0 & -20000. & -20000. & 0 & 0 \\ 1.25 & -1.0 & 0 & 0 & 0 & 0 \\ 0.0375 & -0.0375 & -0.75 & 0 & 0 & 0 \\ 0 & 0.0638 & 0 & -0.053 & -125.91 & -0.1859 \\ 0 & 0 & 0 & -0.255 & 0 & -0.1334 \\ 0 & 0 & 0 & 0 & 377.0 & 0.25 \end{bmatrix}$$

It can be shown [9] that the eigenvalues λ of the resulting closed-loop system satisfy $Re(\lambda) < -\alpha$.

The matrix Riccati equation can be solved using any of the standard algorithms.

The feedback gain matrix K is determined to be

$$K = [1.995 \quad 1.202 \quad -0.925 \quad 22.545 \quad -21.568 \quad 7.975]$$

The system with optimal complete state feedback controller having gain matrix K is then simulated to observe the behavior of the system state variables. The results of the simulation are presented in Chapter 4. Implementation of the feedback gains is given in Fig. 3.2 . In this case $K_v = 1.995$, $K_F = 1.202$, $K_s = -0.925$, $K_t = 22.545$, $K_N = -21.568$ and $K_\delta = 7.975$

III. Deterministic Observer with Optimal Controller (DOOC)

For the optimal complete-state-feedback controller described in II, it was assumed that all the state variables are directly measurable. It could be costly and often not possible to measure all the state variables, and for such cases a deterministic observer could be designed to obtain estimates of the unmeasurable state variables. These estimates are then used to implement the desired control.

The overall problem can be separated into two sub-problems, referred to as control and estimation [11].

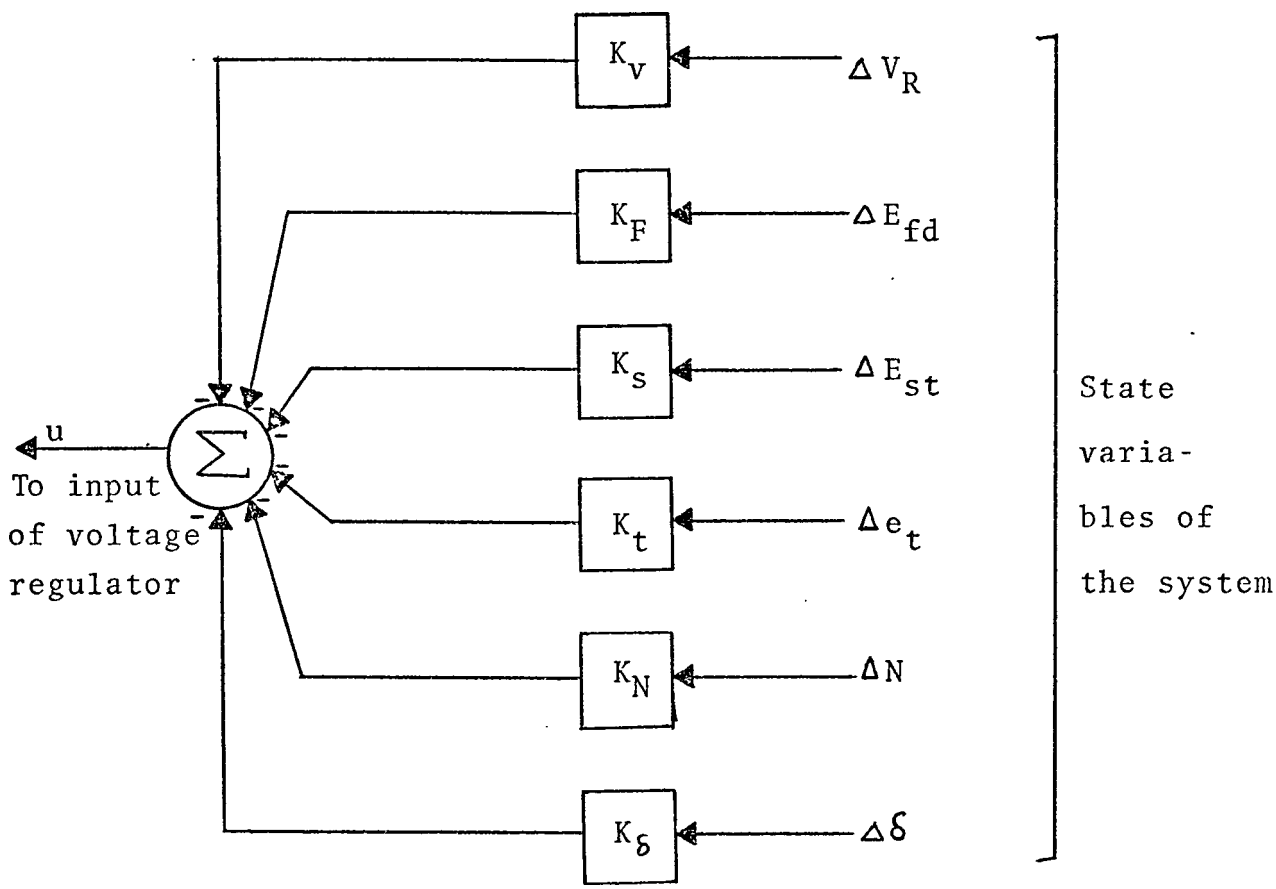

Fig.3.2 Implementation of optimal constant state feedback controller

Design of the Controller:

In the control phase of the solution it is assumed that all the state variables can be measured exactly. Clearly this problem reduces exactly to the one described in section II., i.e., compute the optimal control law $u(t) = -Kx(t)$ which would be applied if $x(t)$ were available and if (3.6) were the cost functional. The design of K is exactly the same as in section II.

Design of Reduced Order Deterministic Observer:

According to Luenberger [11] if p noise-free measurements are available from an nth-order system, then an observer of order (n-p) can be formulated which, theoretically, can track the current state variables of the system as closely as desired. Hence an observer can be used to estimate the unmeasurable states. The observer design procedure described here is given in [12].

Consider a linear deterministic n^{th} order system described by

$$\dot{x}(t) = Ax(t) + Bu(t) \quad \ldots\ldots\ldots\ldots \quad (3.15)$$

$$y(t) = Hx(t) \quad \ldots\ldots\ldots\ldots\ldots\ldots \quad (3.16)$$

It is assumed that H is of full rank and hence we can write (by transformation or reordering of variables)

$y = [I_p \quad 0]\, x(t)$ where p is the number of states measured.

Rearranging all the matrices such that the state variables conform to the above canonical structure of H, i.e.,

$$x = \begin{bmatrix} x_1 \\ x_2 \end{bmatrix} \begin{matrix} p \\ (n-p) \end{matrix} \qquad A = \begin{array}{cc} \leftarrow p \rightarrow & \overset{n-p}{\leftrightarrow} \\ \end{array} \begin{bmatrix} A_{11} & A_{12} \\ A_{21} & A_{22} \end{bmatrix}$$

$$B = \begin{bmatrix} B_1 \\ B_2 \end{bmatrix} \begin{matrix} p \\ (n-p) \end{matrix}$$

yields $\dot{x}_1 = A_{11}x_1 + A_{12}x_2 + B_1u$ . . . . . (3.17)

$\dot{x}_2 = A_{21}x_1 + A_{22}x_2 \quad B_2u$ . . . . . (3.18)

According to Gopinath [12] if (H,A) is completely observable, then $[A_{12},A_{22}]$ is completely observable, i.e.,

$$\text{Rank } ([A_{12}^T, \ A_{22}^T A_{12}^T, \ . \ . \ . \ , \ A_{22}^{T\ n-p-1} A_{12}^T \ ]) = n-p$$

Since (A_{12},A_{22}) is completely observable we can find an L such that $(A_{22}-LA_{12})$ has arbitrary eigenvalues [12].Hence if $\hat{x}_2$ is defined by

$$\dot{\hat{x}}_2 = A_{22}\hat{x}_2 + LA_{12}(x_2-\hat{x}_2) + B_2u + A_{21}x_1 \ . \ . \ . \ . \ . \ . (3.19)$$

then $\tilde{x}_2 = x_2 - \hat{x}_2$ implies that

$$\dot{\tilde{x}}_2 = (\dot{x}_2 - \dot{\hat{x}}_2)$$

However, from Eq. (3.18) and (3.19)

$$\dot{\tilde{x}}_2 = A_{21}x_1 + A_{22}x_2 + B_2u - A_{22}\hat{x}_2 - LA_{12}x_2$$

$$+ LA_{12}\hat{x}_2 - B_2u - A_{21}x_1$$

$$= (A_{22} - LA_{12})x_2 - (A_{22} - LA_{12})\hat{x}_2$$

$$\therefore \dot{\tilde{x}}_2 = (A_{22} - LA_{12})\tilde{x}_2 \quad . \; . \; . \; . \; . \; . \; . \; . \; . \; . \; . \; . \; . \quad (3.20)$$

Therefore, by choosing L appropriately we can make $\tilde{x}_2 \to 0$ as fast as desired. Using Eq. (3.17) to eliminate x_2 from the Eq. (3.19) we obtain,

$$\dot{\hat{x}}_2 = A_{22}\hat{x}_2 + L(\dot{x}_1 - A_{11}x_1 - B_1u) - LA_{12}\hat{x}_2$$

$$+ B_2u + A_{21}x_1$$

$$= (A_{22} - LA_{12})\hat{x}_2 - LA_{11}x_1 - LB_1u + B_2u$$

$$+ A_{21}x_1 + L\dot{x}_1 \quad . \; . \; . \; . \quad (3.21)$$

Each of the terms on the right side of Eq. (3.21) can be observed except $L\dot{x}_1$. Replacing $L\dot{x}_1$ by $(A_{22} - LA_{12})Lx_1$, i.e.,

$$\dot{\bar{x}}_2 = (A_{22} - LA_{12})\bar{x}_2 - LA_{11}x_1 - LB_1u + B_2u$$

$$A_{21}x_1 + (A_{22} - LA_{12})Lx_1 \quad . \quad . \quad (3.22)$$

By integration by parts we can show that

$$\hat{x}_2 = \bar{x}_2 + \exp(A_{22} - LA_{12})t \cdot [\hat{x}_2(0) + LA_{11}x_1(0)$$

$$+ LB_1u(0) - B_2u(0)] + Lx_1(t)$$

Hence by choosing initial conditions suitably for the system given by (3.22) we can make

$$\hat{x}_2 = \bar{x}_2 + Lx_1(t)$$

or more compactly we can write the observer equations:

$$\dot{\bar{x}}_2(t) = (A_{22} - LA_{12})\bar{x}_2(t) + (A_{22} - LA_{12})\, Lx_1(t)$$

$$+ (A_{21} - LA_{11})x_1(t) + (B_2 - LB_1)u(t) \quad . \quad (3.23)$$

$$\hat{x}_2(t) = \bar{x}_2(t) + Lx_1(t) \quad . \; . \; . \; . \; . \; . \; . \; . \; . \; . \; . \; . \; . \; (3.24)$$

with $\bar{x}_2$ the solution to Eq.(3.22) (see Fig. 3.3).

DESIGN EQUATIONS:

In the observer design the main problem is to find an L such that $(A_{22} - LA_{12})$ has the desired eigenvalues. From Thm.1, [12], if the given system is completely observable, then with $\gamma_1, \gamma_2, \ldots, \gamma_{n-p}$ denoting the coefficients of the polynomial of $(A_{22} - LA_{12})$, i.e.,

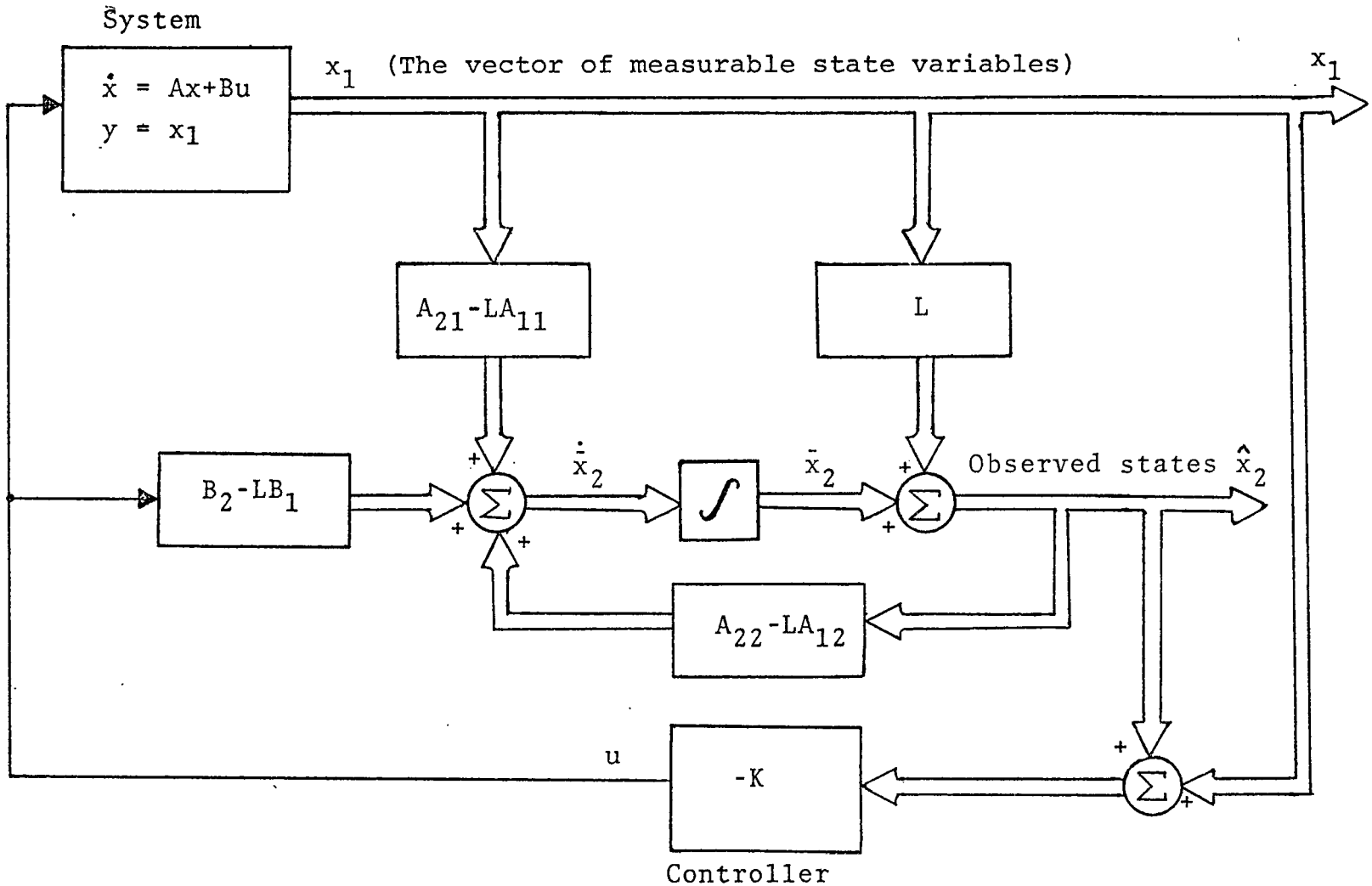

Fig.3.3 Implementation of observer and controller

$$\chi(A_{22} - LA_{12}) = s^{n-p} + \sum_{i=1}^{n-p} \gamma_i s^{n-p-i}$$

there exists an L of rank one satisfying

$$\gamma_1 = a_1 + tr(LA_{12})$$

$$\gamma_2 = a_2 + a_1 tr(LA_{12}) + tr(LA_{12}A_{22}) \qquad (3.25)$$

$$\gamma_{n-p} = a_{n-p} + a_{n-p-1} tr(LA_{12}) + \ldots + tr(LA_{12}A_{22}^{n-p-1})$$

where the a's are coefficients of characteristic polynomial of A_{22}, i.e.,

$$\chi(A_{22}) = s^{n-p} + \sum_{i=1}^{n-p} a_i s^{n-p-i}$$

Let $[\gamma_1, \gamma_2, \ldots, \gamma_{n-p}] \triangleq \gamma^T$

and $[a_1, a_2, \ldots, a_{n-p}] \triangleq a^T$

Rewriting Eq. (3.25)

$$\gamma = a + \begin{bmatrix} 1 & 0 & \cdots & 0 \\ a_1 & 1 & \cdots & 0 \\ a_2 & a_1 & 1 \cdots & 0 \\ \vdots & & & \\ a_{n-p-1} & \cdots & \cdots & 1 \end{bmatrix} \begin{bmatrix} tr(LA_{12}) \\ tr(LA_{12}A_{22}) \\ \vdots \\ tr(LA_{12}A_{22}^{n-p-1}) \end{bmatrix}$$

...(3.25a)

To write Eq.(3.25a) in simplified form, let

$$\hat{A} \triangleq \begin{bmatrix} 1 & 0 & \cdots & 0 \\ a_1 & 1 & \cdots & 0 \\ a_2 & a_1 & 1 \cdots & 0 \\ \vdots & & & \\ a_{n-p-1} & \cdots & \cdots & 1 \end{bmatrix}$$

Obviously $\hat{A}^{-1}$ always exists and can be evaluated easily.

$$\begin{bmatrix} tr(LA_{12}) \\ tr(LA_{12}A_{22}) \\ \vdots \\ tr(LA_{12}A_{22}{}^{n-p-1}) \end{bmatrix} = \hat{A}^{-1}(\gamma - a) \quad \ldots . \quad (3.26)$$

Now assuming $L = \alpha\beta^T$ (α and β are $((n-p)\times 1)$ and $(p\times 1)$ matrices respectively).

Then $tr(LA_{12}A_{22}{}^K) = tr(\alpha\beta^T A_{12}A_{22}{}^K)$

$$= tr(A_{22}^T{}^K A_{12}^T \beta\alpha^T)$$

$$= \beta^T A_{12}A_{22}^K \alpha$$

So Eq. (12) becomes

$$\begin{bmatrix} \beta^T A_{12}\alpha \\ \beta^T A_{12}A_{22}\alpha \\ \beta^T A_{12}A_{22}{}^{n-p-1}\alpha \end{bmatrix} = \hat{A}^{-1}(\gamma - a)$$

or
$$\begin{bmatrix} \beta^T A_{12} \\ \beta^T A_{12} A_{22} \\ \vdots \\ \beta^T A_{12} A_{22}^{n-p-1} \end{bmatrix} \alpha = \hat{A}^{-1}(\gamma - a)$$

or
$$w(\beta)\alpha = \hat{A}^{-1}(\gamma - a)$$

where
$$w(\beta) \triangleq \begin{bmatrix} \beta^T A_{12} \\ \beta^T A_{12} A_{22} \\ \vdots \\ \beta^T A_{12} A_{22}^{n-p-1} \end{bmatrix}$$

$$\therefore \alpha = w^{-1}(\beta)\hat{A}^{-1}(\gamma - a) \quad . \; . \; . \; . \; . \; . \; . \; . \; . \; . \quad (3.27)$$

According to Lemma 4 [12] rank $(w(\beta)) = n-p$ for almost all β, so a unique solution exists.

Thus the procedure to design the observer is as follows:

(1) Choose eigenvalues of $(A_{22} - LA_{12})$ at any desired location in the left half of the complex plane.

(2) Compute γ, a and A matrices.

(3) Choose appropriate β.

(4) Compute $w(\beta)$.

(5) Compute $\alpha = w^{-1}(\beta)\hat{A}^{-1}(\gamma - a)$.

(6) Finally find $L = \alpha\beta^T$.

<u>Design of an Observer for the PSS</u>

Writing the system in the form described earlier

$$\begin{bmatrix} \dot{x}_1 \\ \dot{x}_2 \\ \hline \dot{x}_3 \\ \dot{x}_4 \\ \dot{x}_5 \\ \dot{x}_6 \end{bmatrix} = \left[\begin{array}{cc|cccc} -50.0 & 0.0 & -20000.0 & -20000.0 & & 0 \\ 1.25 & -1.25 & 0 & 0 & 0 & 0 \\ \hline .0375 & -.0375 & -1.0 & 0 & 0 & 0 \\ 0 & .0638 & 0 & -.303 & -125.91 & -.1859 \\ 0 & 0 & 0 & -.255 & -.25 & -.1334 \\ 0 & 0 & 0 & 0 & 377. & 0 \end{array}\right]$$

$$\begin{array}{cc} A_{11} & A_{12} \\ A_{21} & A_{22} \end{array}$$

$$\begin{bmatrix} x_1 \\ x_2 \\ \hline x_3 \\ x_4 \\ x_5 \\ x_6 \end{bmatrix} + \begin{array}{c} B_1 \\ \begin{bmatrix} 20000.0 \\ 0 \\ \hline 0 \\ 0 \\ 0 \\ 0 \end{bmatrix} \\ B_2 \end{array} u$$

It is clear from the above arrangement of the system that states x_1 and x_2 are measured and the remaining four states are to be observed. Hence the observer is of fourth order.

Choosing eigenvalues of $(A_{22} - LA_{12})$ at -5.0, -5.0, -5.0, -5.0 and $\beta^T = [1.0 \quad 2.0]^T$, steps 2, 4, 5, and 6 were computed to find matrix L.

$$L = \begin{bmatrix} 5.998E-4 & 1.199E-3 \\ -1.52E-3 & -3.04E-3 \\ 3.528E-5 & 7.06E-5 \\ 2.94E-3 & 5.87E-3 \end{bmatrix}$$

Finally, the system is simulated with the observer and controller using CSMP. Results are shown in Chapter 4. A scheme for implementing the observer along with the controller has been shown in Fig. 3.3 .

IV. Design of Stochastic Optimal Controller (SOC)

If all the states are not available we can also design a Kalman filter [10,13] with assumed statistics of system and measurement noises. Let the system be described by

$$\dot{x}(t) = Ax(t) + Bu(t) + w(t) \quad . \; . \; . \; . \; . \; . \; . \; . \quad (3.28)$$

$$z(t) = Hx(t) + v(t) \quad . \; . \; . \; . \; . \; . \; . \; . \; . \; . \; . \; . \quad (3.29)$$

The matrices A, B and vector x are defined in 3.II.

The noise signals w and v have the following characteristics:

(1) Signals w and v are stationary gaussian process with zero mean;

(2) Signals w and v are uncorrelated, i.e., $E[w(t)v^T(t)] = 0$;

(3) Signals w and v are white noise and their correlation functions may be written as:

$$E[w(t)w^T(\tau)] = \hat{Q}\delta(t-\tau)$$

$$E[v(t)v^T(\tau)] = \hat{R}\delta(t-\tau)$$

where $\delta(t-\tau)$ is the Dirac delta function. It is a common practice to make elements of w and v uncorrelated, so that $\hat{Q}$ and $\hat{R}$ become diagonal matrices. $\hat{Q}$ and $\hat{R}$ are chosen as:

$$\hat{Q} = \begin{bmatrix} 0.01 & 0 & 0 & 0 & 0 & 0 \\ 0 & 0.01 & 0 & 0 & 0 & 0 \\ 0 & 0 & 0.01 & 0 & 0 & 0 \\ 0 & 0 & 0 & 0.01 & 0 & 0 \\ 0 & 0 & 0 & 0 & 0.01 & 0 \\ 0 & 0 & 0 & 0 & 0 & 0.01 \end{bmatrix}, \quad \hat{R} = [0.001]$$

The initial state $x(t_o)$ is taken as a zero mean gaussian random vector.

The problem now is to find a closed-loop controller for generating the optimal-control input u(t) in terms

of the output z(t). For this purpose, it is desired to determine u(t) such that the cost functional

$$J = E\{\int_{t_o}^{\infty} [x^T(t)Qx(t) + u^T(t)Ru(t)]dt\} \quad . \; . \; . \; . \; . \; . \; . \quad (3.30)$$

is minimized, where expectation is over $x(t_o)$ and the stochastic processes w and v on the interval (t_o, ∞). The matrices Q and R are defined in Section II.

Using the separation principle [13] this problem can separated into two subproblems the estimation problem and the control problem.

CONTROL PROBLEM:

To design the controller it is assumed that all the state variables are available, and hence that we can use the technique discussed in 3.II; i.e., compute the optimal control law $u(t) = -Kx(t)$ which would be applied if perfect noise-free measurements of x(t) were available and if (3.6) were the cost functional. The design of F is exactly the same as in II.

ESTIMATION PROBLEM:

In order to use the above controller it is necessary to reconstruct the state variables in some fashion from the noisy measurements which are the only actual outputs of the system. The device which accomplishes this task is the Kalman filter. Using the noisy measurements z(t)

as inputs, the Kalman filter generates estimates of all the state variables.

For this purpose Kalman [10] defined a linear dynamic system model very similar to the original system model. The input of the filter is $z(t)$ and the output is $\hat{x}(t)$. Specially, $\hat{x}(t)$ is the solution of

$$\dot{\hat{x}}(t) = A\hat{x}(t) + K_e[z(t) - H\hat{x}(t)] + Bu(t) \quad . \; . \quad (3.31)$$

wherein K_e is termed the Kalman gain matrix and is defined by

$$K_e = PH^T\hat{R}^{-1} \quad . \; . \; . \; . \; . \; . \; . \; . \; . \; . \; . \; . \quad (3.32)$$

where P in (3.32) is obtained by solving the following algebric Riccati equation:

$$AP + PA^T + \hat{Q} - PH^T\hat{R}^{-1}HP = 0 \quad . \; . \; . \; . \; . \; . \quad (3.33)$$

To compare the performance of the system given in Section 3.I the internal frequency deviation is used as the only measurement, i.e.,

$$H = [0 \quad 0 \quad 0 \quad 0 \quad 1.0 \quad 0]$$

The matrix Riccati equation (3.33) was computed to determine the following Kalman gain matrix

$$K_e = \begin{bmatrix} 1.847 \\ 1.238 \\ -487.59 \\ -489.36 \\ 351.58 \\ 0.725 \end{bmatrix}$$

Finally, the system with Kalman filter and controller is simulated to see the behavior of the state variables of the system. The results are displayed in Chapter 4.

CHAPTER 4

SIMULATION RESULTS

In this chapter the effectiveness of the power system stabilizers designed in Chapter 3 has been studied by subjecting the system to a pulse disturbance of -0.4 p.u. for a period of 0.025 sec. This is the same disturbance used by Schlief [1]. Digital simulation of these stabilizers is carried out using both the linear and the nonlinear models of the generator. This chapter has been divided into four sections. The first two sections present results using, respectively, the linear and nonlinear models when subjected to the pulse disturbance. The final two sections give results of the two models when system and measurement noises are taken into consideration.

I. Results for the Linear Model

The time responses of the generator terminal voltage and the internal frequency are given in Figs. 4.1 to 4.4. First and second maximum deviations from operating values are presented in Table 4.1. The cost function data are compared in Table 4.2.

II. Results for the Nonlinear Model

Terminal voltage and internal frequency time res-

ponses for the nonlinear generator model when subjected to the pulse disturbance input for the dynamic stabilizer are given in Figs. 4.1a and 4.2a. These responses for the other three stabilizers are depicted in Figs. 4.5 and 4.6.

III. Results of the Linear Model with Noise Considered

The system driving noise vector used in the simulation is a gaussian white noise with zero mean and covariance matrix $10^{-10}[I_6]$. The system measurement noise vector has the same properties but the dimensions of the noise vector and the covariance matrix vary according to the number of the state variables measured e.g., in the case of Stabilizer Type III(DOOC) only two state variables are measured. In that case, the dimension of the measurement noise vector will be (2x1) and that of the covariance matrix (2x2).

The time responses of the terminal voltage and internal frequency are given in Figs. 4.7 and 4.8. Table 4.3 gives the maximum daviations of these state variables from the nominal operating values. Cost function data are compared in Table 4.4.

IV. Results of the Nonlinear Model with Noise Considered

The properties of the system driving noise and the measurement noise are the same as were given in the above section. Figs. 4.9 and 4.10 show the time responses of the terminal voltage and the internal frequency following the pulse disturbance.

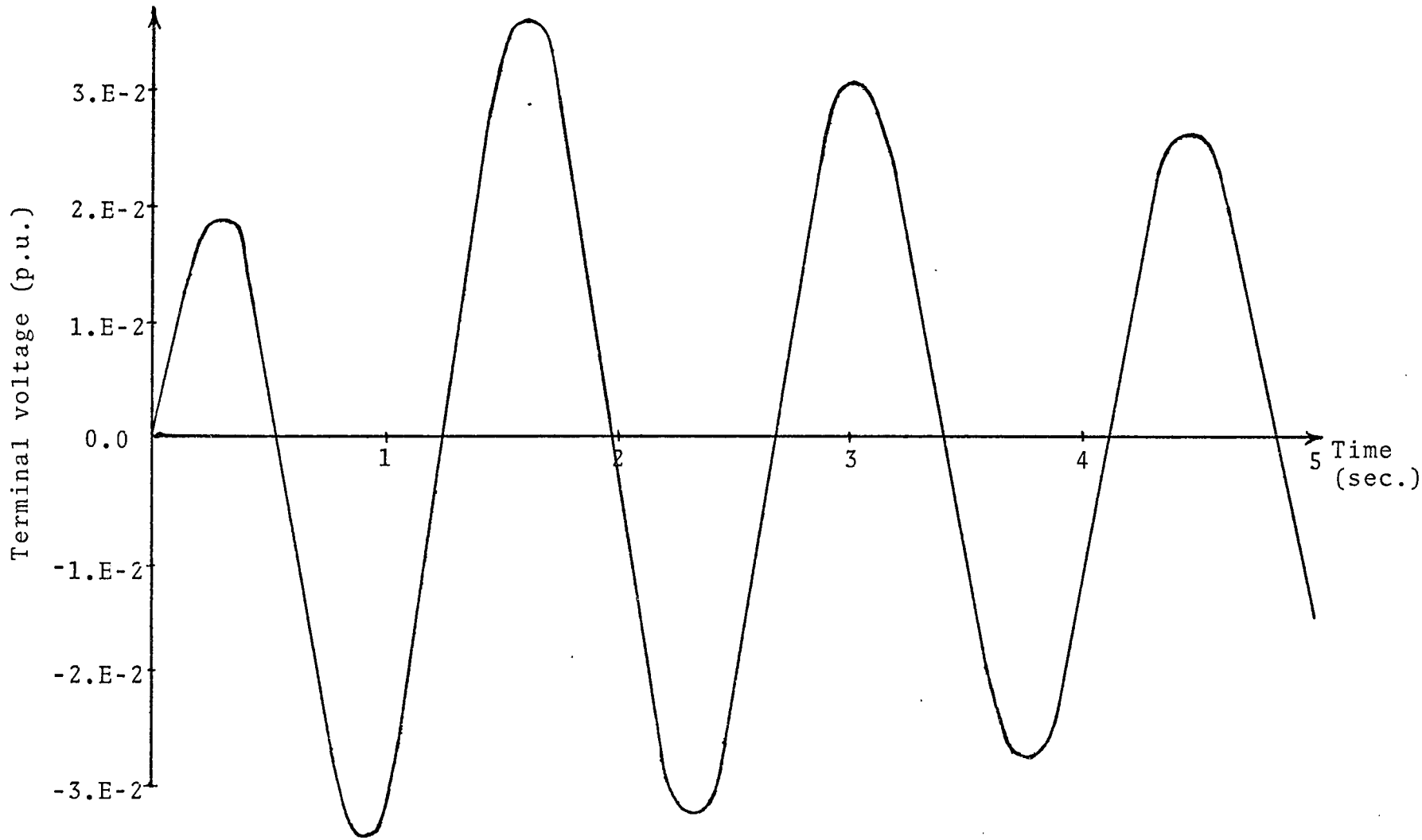

Note:
a.Eb means $a \times 10^b$

Fig. 4.1 The terminal voltage response of the stabilizer Type I (DS) for the pulse disturbance input. (Linear model, noise-free case)

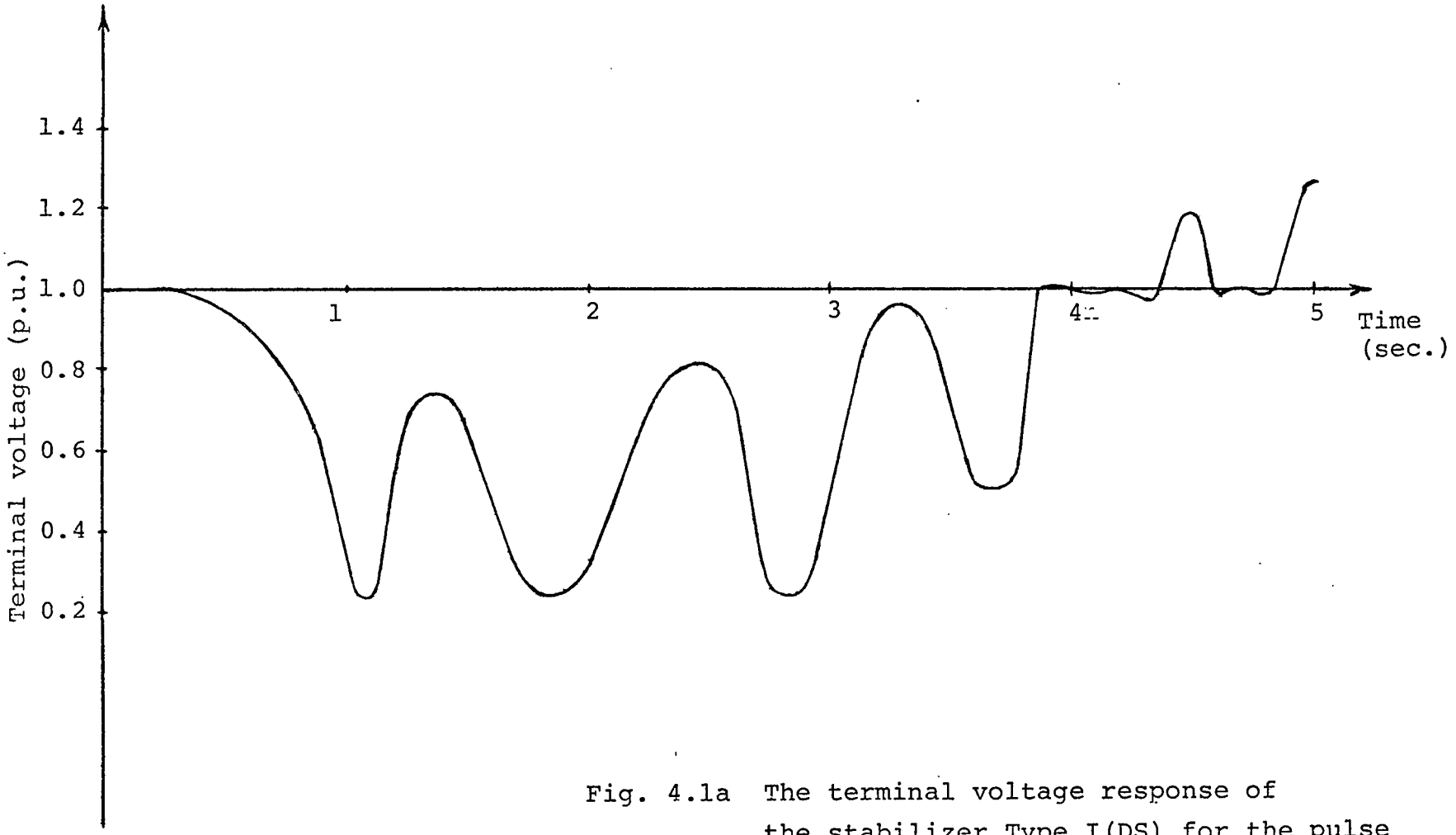

Fig. 4.1a The terminal voltage response of the stabilizer Type I(DS) for the pulse disturbance input. (Nonlinear model, noise-free case)

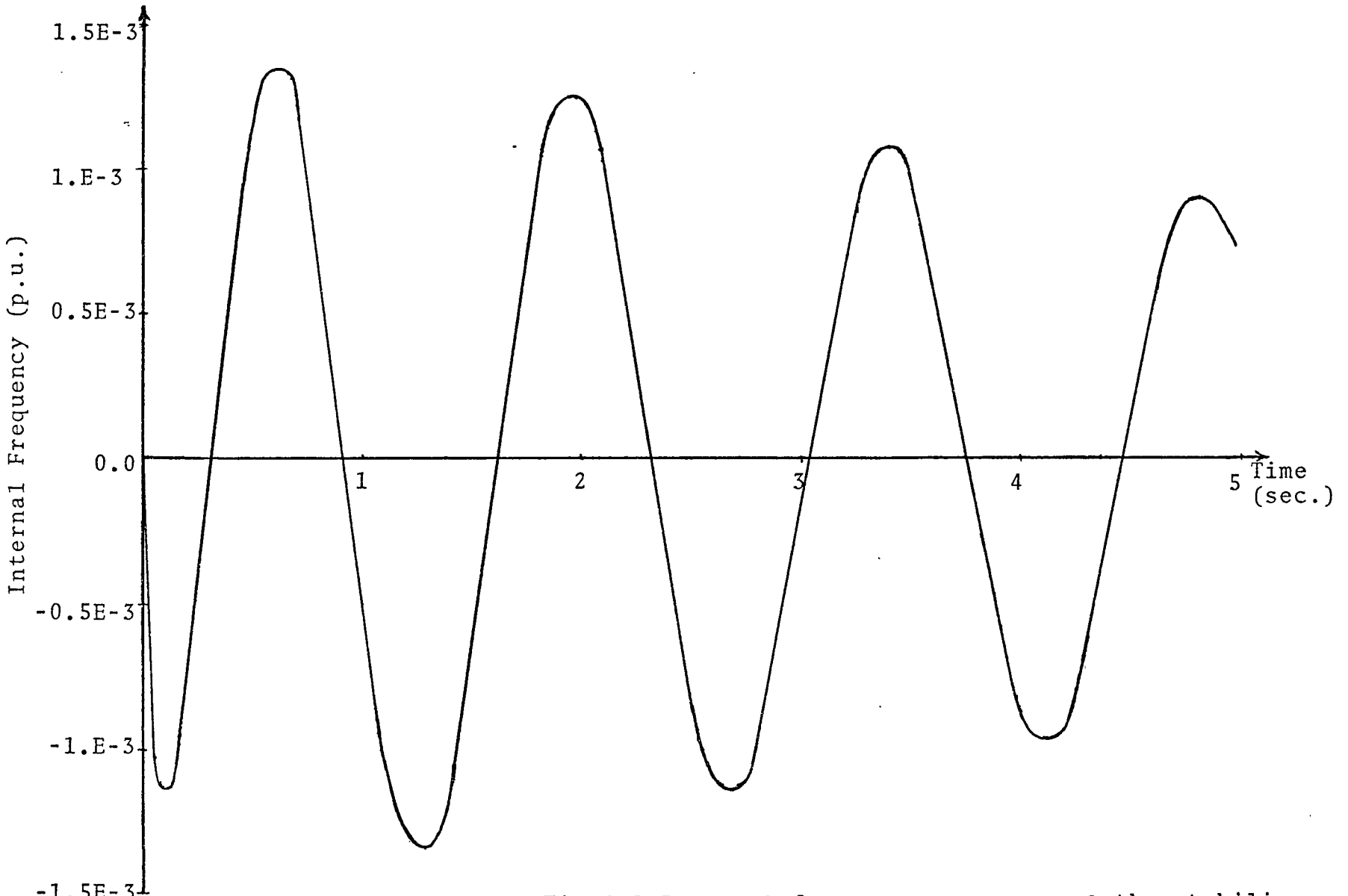

Note:
a.Eb means $a \times 10^{b}$

Fig 4.2 Internal frequency response of the stabilizer Type I(DS) for the pulse disturbance input. (Linear model, noise-free case)

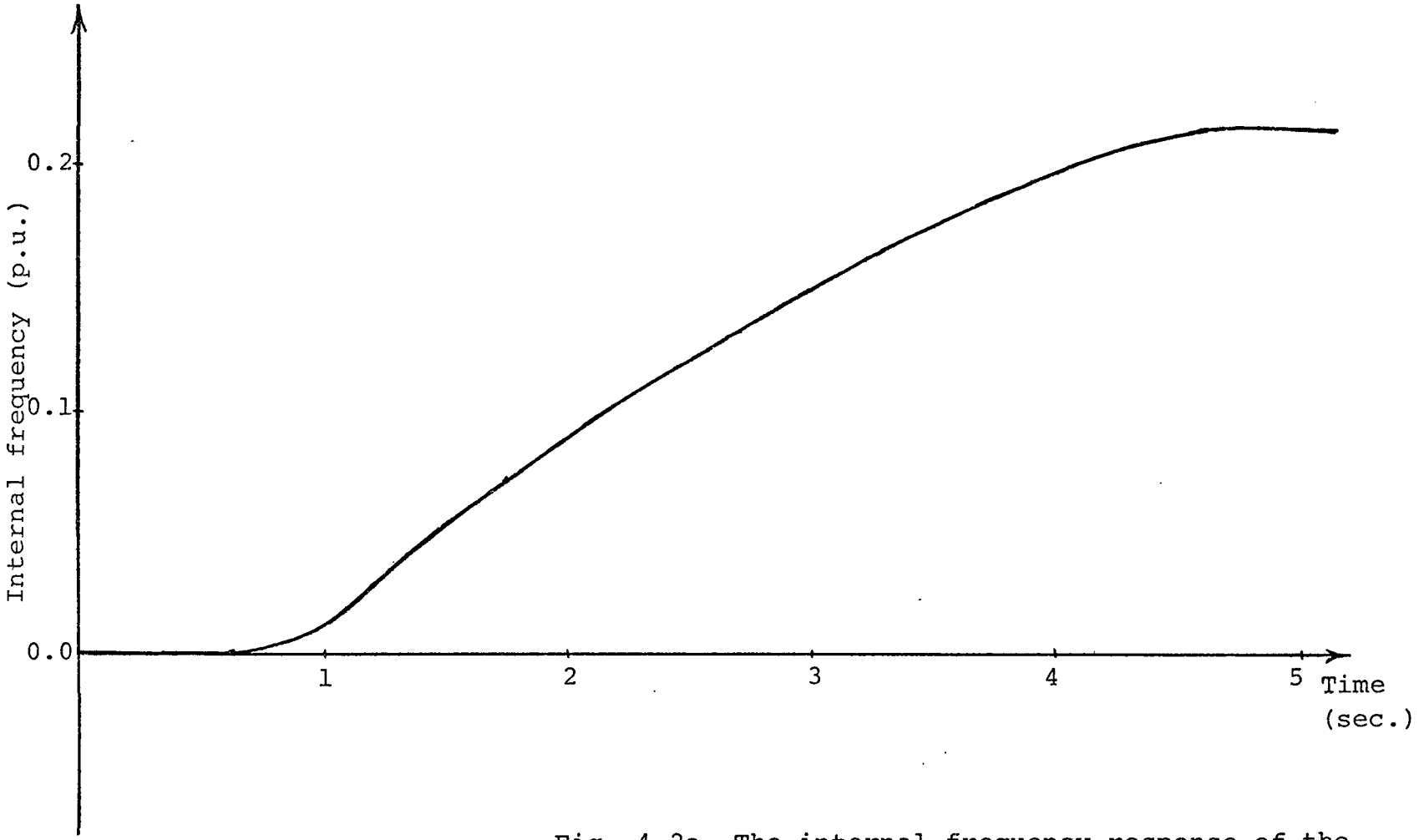

Fig. 4.2a The internal frequency response of the stabilizer Type I(DS) for the pulse disturbance input.(Nonlinear model,noise-free case)

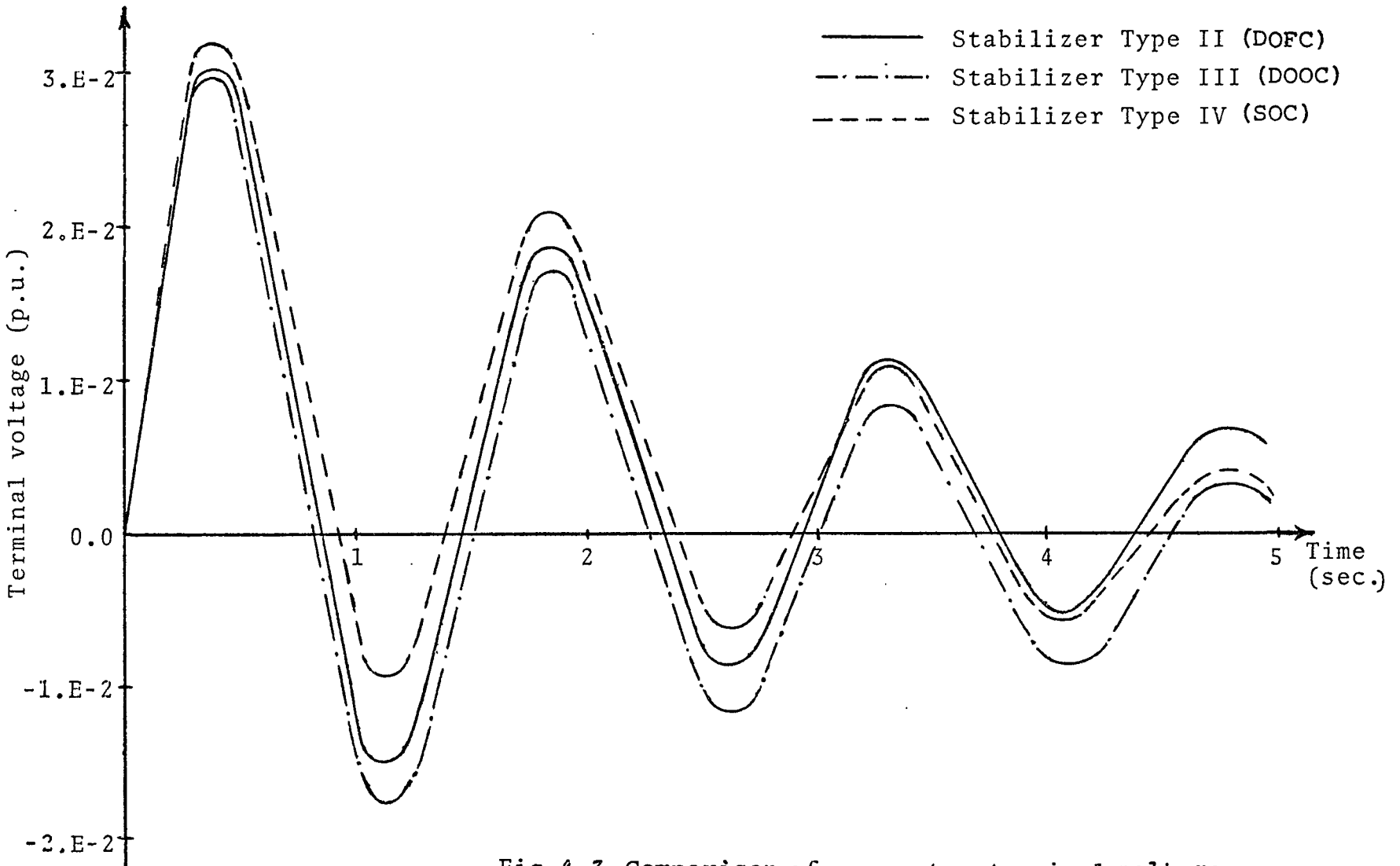

Fig.4.3 Comparison of generator terminal voltage responses to the pulse disturbance input. (Linear model, noise-free case)

Note:
a.Eb means $a \times 10^b$

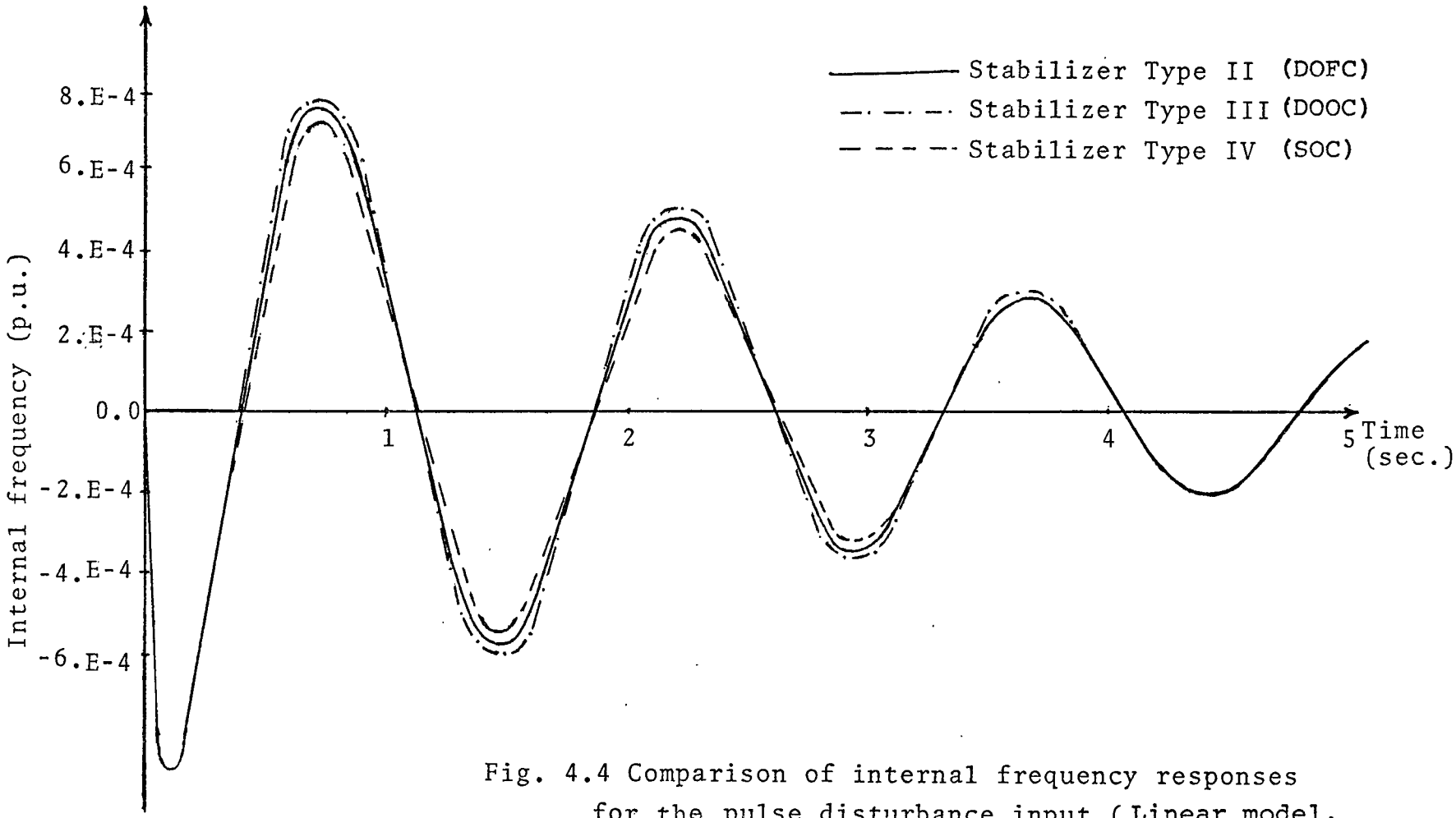

Fig. 4.4 Comparison of internal frequency responses for the pulse disturbance input.(Linear model, noise-free case)

Note:
a.Eb means $a \times 10^b$

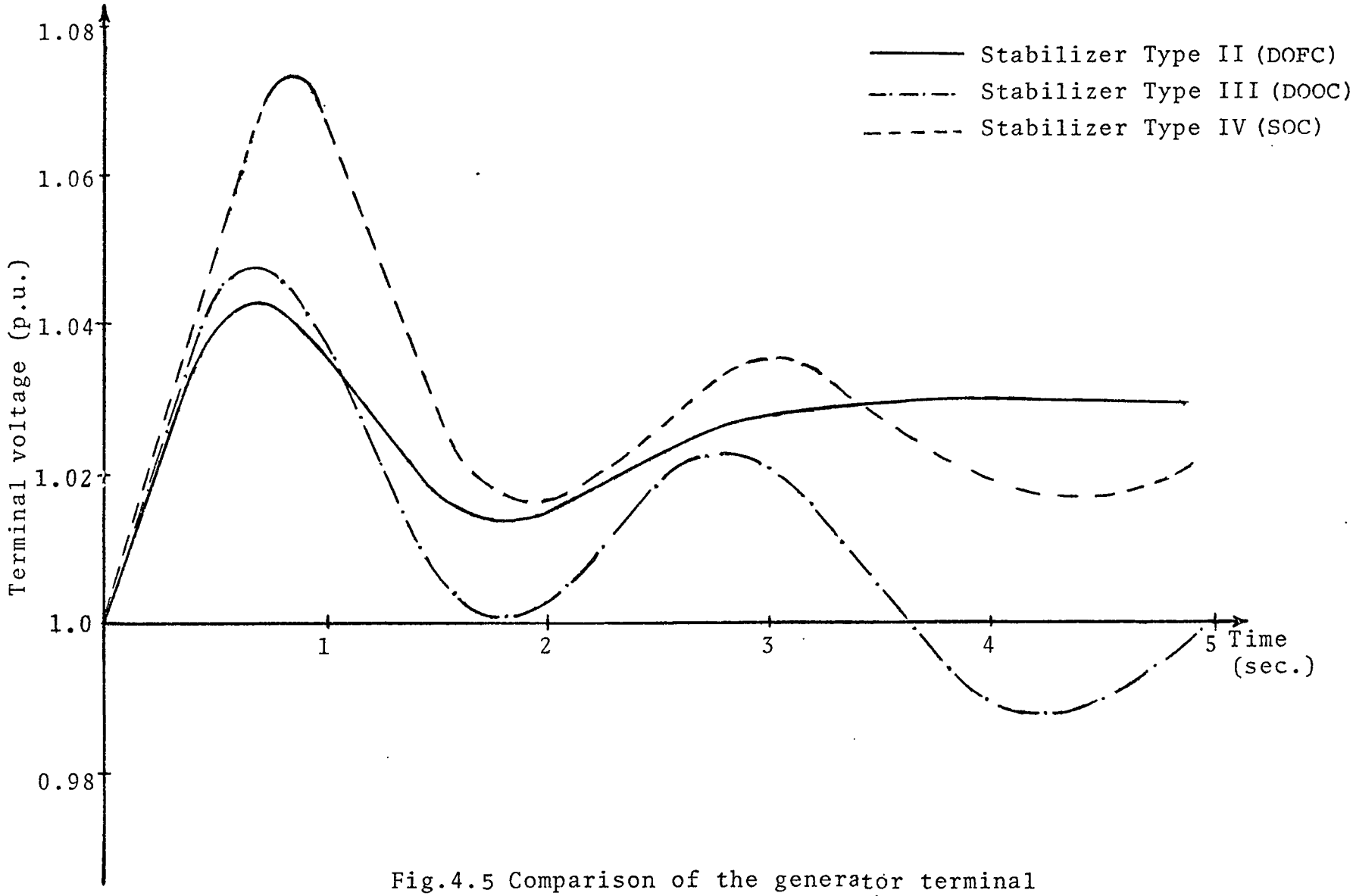

Fig.4.5 Comparison of the generator terminal voltage responses to the pulse disturbance input.(Nonlinear model,noise-free case)

Note:
a.Eb means $a \times 10^b$

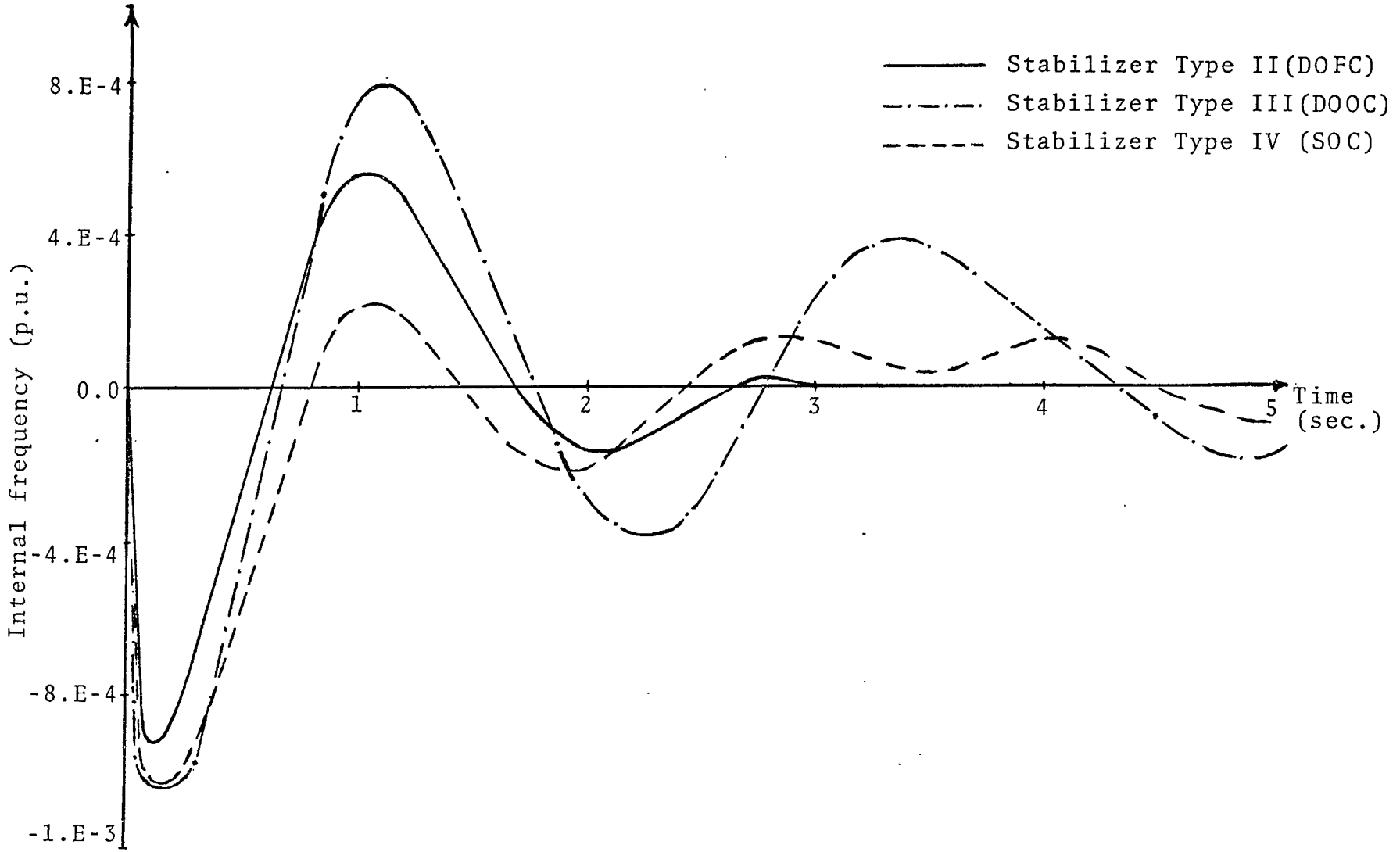

Fig.4.6 Comparison of internal frequency responses to the pulse disturbance input.(Nonlinear model, noise-free case)

Note:
a.Eb means $a \times 10^b$

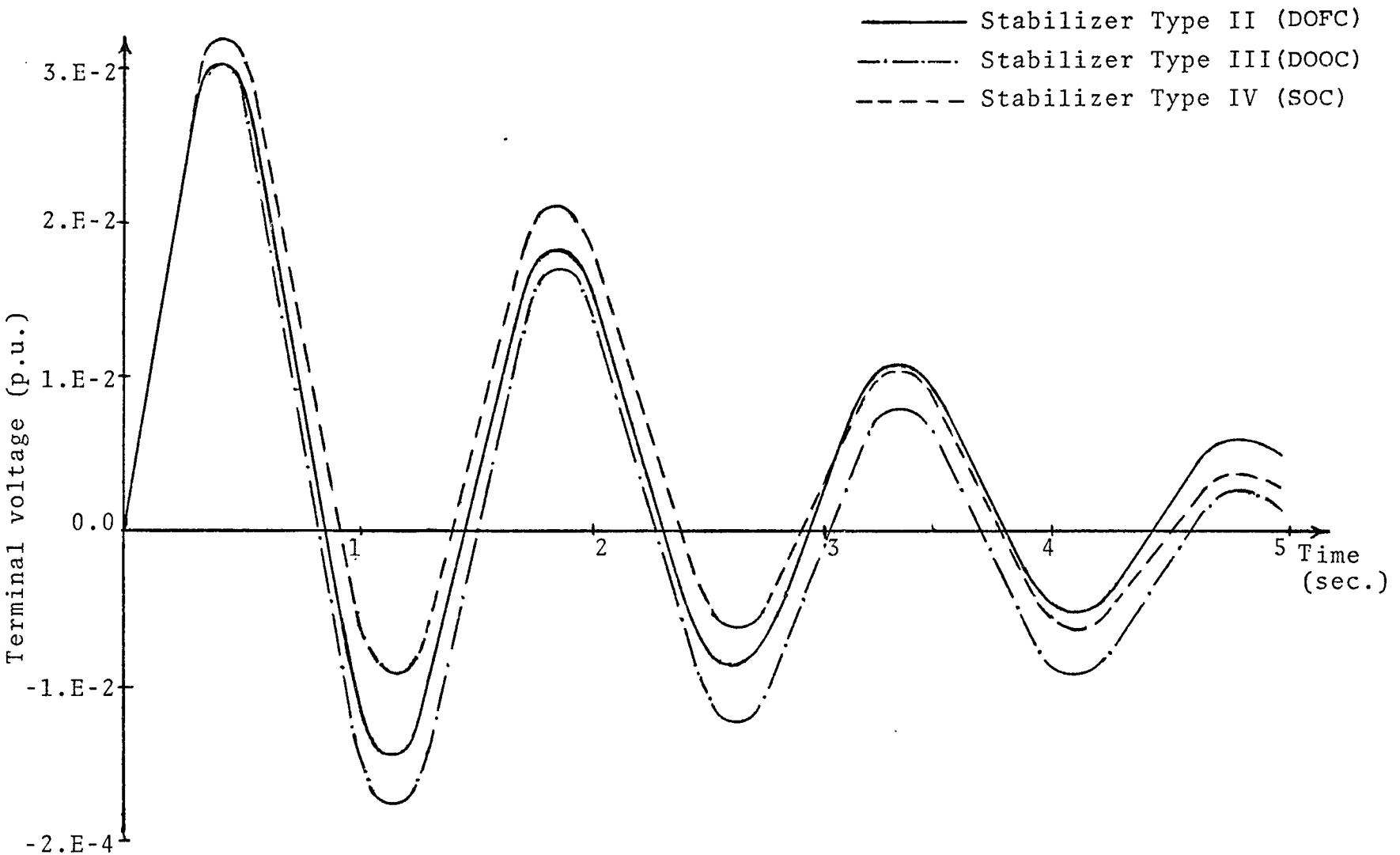

Note:
a.Eb means $a \times 10^{b}$

Fig.4.7 Comparison of the generator terminal voltage responses to the pulse disturbance input for the case of linear model with gaussian noise(Mean=0.0, S.D. =0.00001)

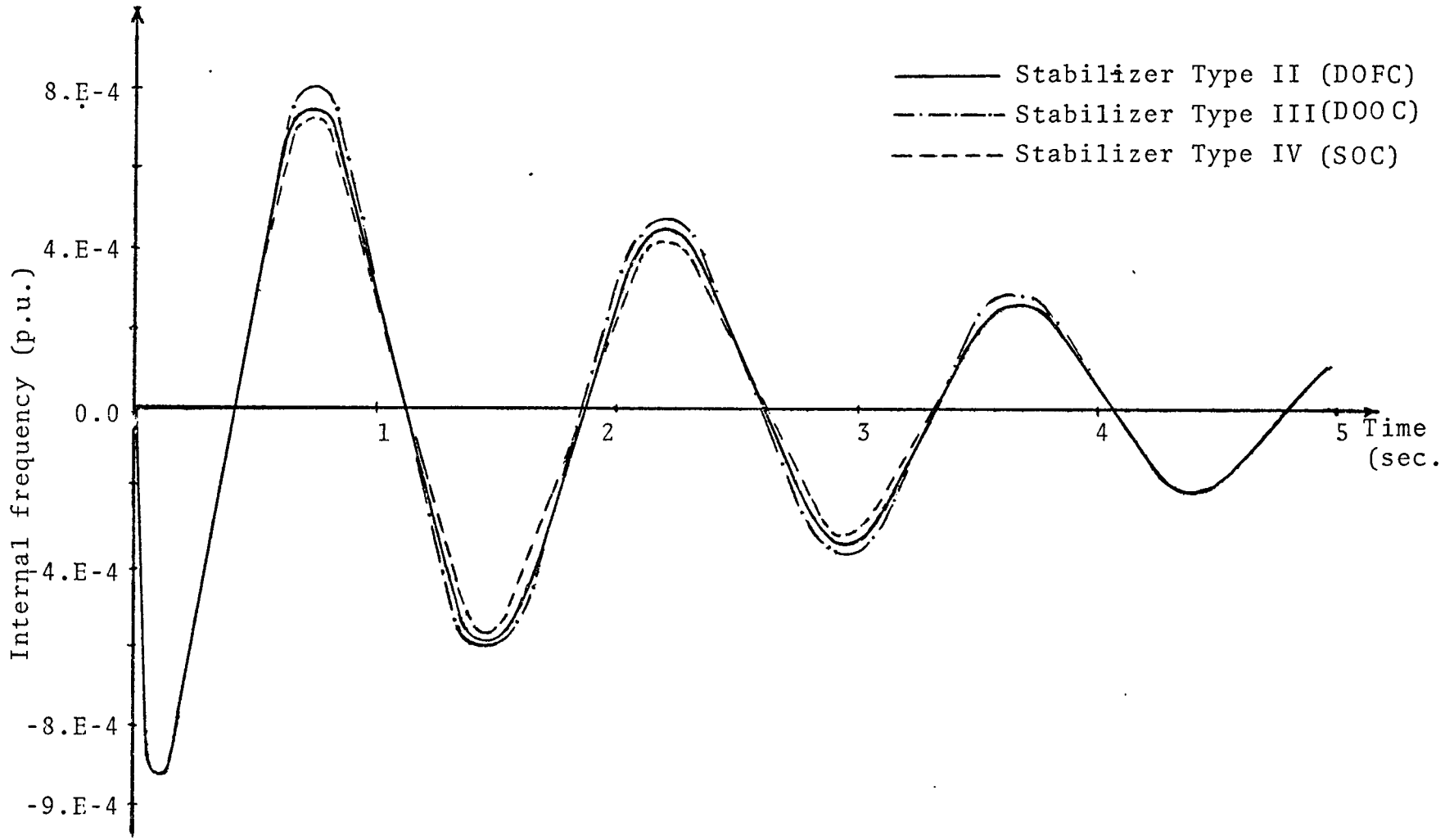

Note:
a.Eb means $ax10^b$

Fig.4.8 Comparison of internal frequency responses to the pulse disturbance input for the case of linear model with gaussian noise(Mean=0.0,S.D.=0.00001)

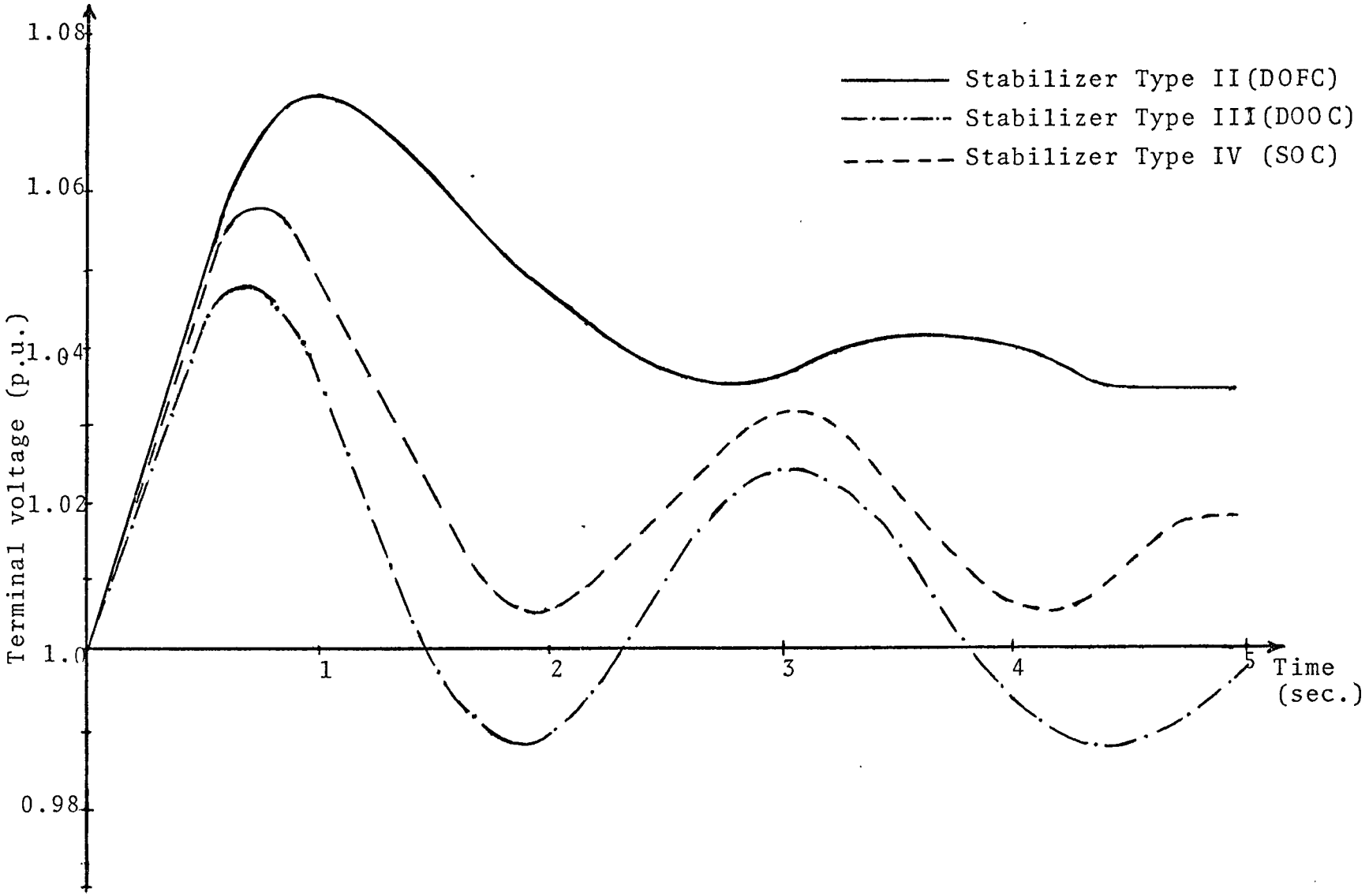

Note:
a.Eb means $ax10^b$

Fig.4.9 Comparison of the generator terminal voltage responses to the pulse disturbance input for the case of nonlinear model with gaussian noise(Mean=0.0,S.D.=.00001)

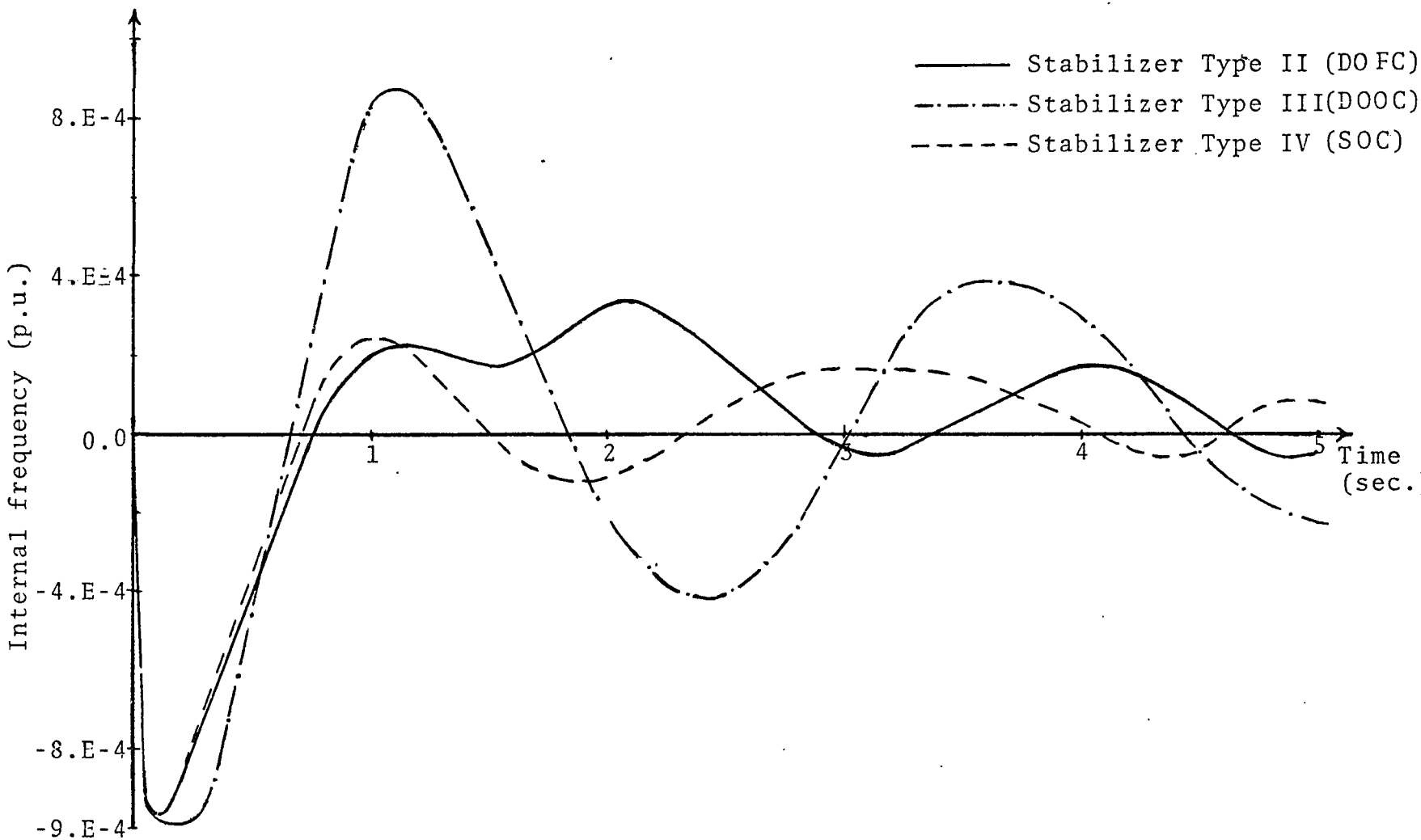

Fig.4.10 Comparison of internal frequency responses to the pulse disturbance input for the case of non-linear model with gaussian noise(Mean=0.0,S.D.=0.00001)

Note:
a.Eb means $a \times 10^{b}$

Table 4.1 Pulse disturbance responses-
deviations from steady-state values
(Linear model, noise-free case)

Stabilizer Type	Terminal Voltage $100\Delta e_t$ (p.u.)				Internal Frequency $10000\Delta N$ (p.u.)			
	Max. First Up Swing	Max. First Down Swing	Max. Second Up Swing	Max. Second Down Swing	Max. First Down Swing	Max. First Up Swing	Max. Second Down Swing	Max. Secon Up Swing
I (DS)	1.88	-3.38	3.54	-3.26	-11.3	13.5	-13.5	12.5
II (DOFC)	3.056	-1.48	1.84	-0.89	-9.13	7.63	-5.78	4.61
III (DOOC)	3.03	-1.76	1.66	- 1.23	-9.12	7.87	-6.01	4.81
IV (SOC)	3.22	-0.89	2.08	-0.63	-9.14	7.04	-5.33	4.42

Table 4.2 A comparison of cost functionals
(Linear model,noise-free case)

Stabilizer Type	J_x	J_u	J_x+J_u
I (DS)	13.05	2.2E-3	13.05
II (DOFC)	7.06E-3	6.81E-4	7.74E-3
III (DOOC)	9.97E-3	6.73E-4	1.06E-2
IV (SOC)	3.64E-2	7.438E-4	3.72E-2
Model without stabilizer	284.33	-	284.33

Table 4.3 Pulse disturbance responses-
deviations* from steady-state values.
Linear model with gaussian noise
(Mean=0.0,S.D.=0.00001)

Stabilizer Type	Terminal Voltage $100\Delta e_t$ (p.u.)				Internal Frequency $10000\Delta N$ (p.u.)			
	Max. First Up Swing	Max. First Down Swing	Max. Second Up Swing	Max. Second Down Swing	Max. First Down Swing	Max. First Up Swing	Max. Second Down Swing	Max. Second Up Swing
I (DS)	1.88	-3.37	3.53	-3.26	-11.3	13.5	-13.5	12.5
II (DO FC)	3.04	-1.43	1.83	-.865	-9.11	7.53	-5.7	4.53
III (DOO C)	3.03	-1.76	1.66	-1.22	-9.12	7.87	-6.0	4.81
IV (SO C)	3.21	-0.87	2.08	-0.62	-9.12	7.01	-5.32	4.41

* These deviations are time averages for particular sample paths of the noise.

Table 4.4 A comparison of cost functionals* for the case of linear model with gaussian noise(Mean=0.0,S.D.=0.00001)

Stabilizer Type	J_x	J_u	J_x+J_u
I (DS)	13.032	2.21E-3	13.035
II (DOFC)	6.76E-3	6.56E-4	7.42E-3
III (DOOC)	9.94E-3	6.70E-4	1.06E-2
IV (SOC)	3.63E-2	7.42E-4	3.70E-2

* These cost functionals are time averages for particular sample paths of the noise.

CHAPTER 5

INTERPRETATION OF RESULTS

The main objective of this thesis is to use modern control strategies to design different types of PSS. To show the effectiveness of these PSS it is necessary to compare them with the PSS designed earlier by using the structure suggested by Schleif [1]. The PSS designed earlier is designated as Type I, and its time responses of terminal voltage and internal frequency are shown in Figs. 4.1 and 4.2. Comparing these responses with those shown in Figs. 4.3 and 4.4 it can be clearly seen that the damping is much better in the case of stabilizer Type II, III and IV. By looking at Table 4.1 it is observed that cost functions of Type II,III, and IV are very much smaller than Type I. Hence the overall performance of PSS based on modern control would appear to be far better than that of PSS designed by classical approach used by Schleif [1].

The cost function obtained for the optimal controller with complete state feedback(Type II) is lower, as expected*, than that obtained via use of either the

---

* The availability of noise-free measurements of all state variables is a convenient fiction for benchmark purposes.

Kalman filter or the observer. The performance of the observer plus optimal controller is comparable to the optimal controller with all the state variables available for measurement. Thus, it may be possible (in a very low-noise environment) to eliminate the necessity of measuring all the state variables of the system. Finally, the Kalman filter plus optimal controller behaves quite well and hence errors in measuring the state variables can be compensated for in the design of the controllers.

Finally, it should be mentioned that the stabilizer Type I when applied to the nonlinear generator model makes the closed-loop system unstable. This instability is clearly seen by looking at Fig. 4.1a. Also by looking at Fig. 4.5 it is observed that for the case of the stabilizer Type II(DOFC) the terminal voltage has a bias in it;* i.e., it settles down at about 1.03 p.u. instead of the steady-state value of 1.0 p.u.. The mechanical power disturbance takes the terminal voltage from 1.0 p.u. to the new steady-state value of 1.03 p.u.. This means that once the disturbance is over the terminal voltage oscillates about the new steady-state value, and finally settles down at this value.

---

* In the simulations of the system with the different stabi-

lizers, the dynamics of the real power-frequency controller were not included. Hence the mechanical power disturbance has no feedback to the governing system of the p-f loop. The rotor position will change, reducing the rotor angle, and thus, in the absence of such feedback, will create a steady-state offset in the terminal voltage. For the purpose of the research described herein, deletion of the p-f loop dynamics was deemed to be a cost-effective trade-off of (savings in computer time) versus (allowing the above mentioned predictable bias).

CHAPTER 6

CONCLUSIONS AND RECOMMENDATIONS

The research initiated in this thesis has provided the following specific results:

(1) From the transient stability point of view it has been found that PSS designed on the basis of modern control theory exhibit much better damping than the PSS designed earlier by Schlief et al [1].

(2) The need to measure all state variables can be eliminated by using either the observer or the Kalman filter to estimate these state variables. For low noise environments the former suffices, while in other cases the Kalman filter is the appropriate choice.

It is worthwhile here to compare the results obtained in this thesis with some previous work in this field. In [14] a comparison is made between voltage transients at a generator plant where the automatic voltage regulator is tuned for open-circuit and for on-line conditions. This technique is suitable only when the generator is delivering a particular load. Since the AVR is tuned at this load level, it will not damp voltage transients effectively when the generator is running at a different load level. On the contrary the PSS designed here will work equally well at various load levels.

In [15] a PSS of Type I has been designed using

root-locus techniques. A comparison cannot be made since no transient responses were given in that paper. In [16] some output feedback controllers with dynamic and/or constant gains have been designed with the assumption that all the state variables are available for measurement. The results obtained therein are basically the same as given in Chapter 5. But this thesis goes a step further and explores the possibilities of estimating the state variables not available for measurement.

Some of the research topics not included in this thesis are given here as suggestions for further research:

1. Extend this research for a two-area or multi-area power system.
2. Extend the work done here for the case of multiple generators connected to an infinite bus.
3. In the computer program for the pattern search, the integration to obtain state variables and the cost functional was carried out for a long period of time after the disturbance was over. A more efficient method would be to use a Lyapunov equation to evaluate the cost functional for times greater than t_d, where t_d marks the time at which the disturbance vanishes.

REFERENCES

[1] F.R. Schlief, H.D. Hunkins, G.E. Martin,and E.H. Hatten, "Excitation Control to Improve Powerline Stability", IEEE Transactions on Power Apparatus and Systems,Vol. PAS-87, pp.1426-1434,June 1968.

[2] H.M. Ellis, J.E. Hardy, A.L. Blythe,and J.M. Skooglund "Dynamic Stability of the Peace River Transmission system system", IEEE Transactions on Power Apparatus and Systems, Vol.PAS-87,pp.586-600, June 1966.

[3] R. Hooke, T.A. Jeeves,"Direct Search Solution of Numerical and Statistical Problems", J. Assoc. Comp. Mach., 8(1961),2.

[4] IEEE Committee Report,"Computer Representation of Excitation Systems", IEEE Transactions on Power Apparatus and Systems, Vol.PAS-87,pp.1460-1464, June 1968.

[5] B. Adkins,"General Theory of Electrical Machines", Chapman and Hall Ltd., London,pp.121-123, 1959.

[6] R.H. Park,"Two Reaction Theory of Synchronous Machines II", Transaction AIEE, Vol.52,p.352, 1933.

[7] F.P. deMello, C. Concordia,"Concepts of Synchronous Machine Stability as Affected by Excitation Control," IEEE Transactions on Power Apparatus and Systems, Vol. PAS-88,pp.316-329, April 1969.

[8] D.G. Schultz, J.L. Melsa,"State Functions and Linear Control Systems," McGraw-Hill Book Co., 1967.

[9] B.D.O. Anderson, J.B. Moore,"Linear Optimal Control," Prentice-Hall Electrical Engineering Series, 1971.

[10] R.E. Kalman, R.S. Bucy,"New Results in Linear Filtering and Prediction Theory," Trans. ASME Ser. D:J. Basic Eng., Vol.83, March 1961, pp.95-108.

[11] D.G. Luenberger,"Observers for Multivariable Systems," IEEE Transactions on Automatic Control, Vol.AC-11,No. 2, April 1966.

[12] B. Gopinath,"On the Control of Linear Multiple Input-Output Systems," The Bell System Technical Journal, Vol.50,No.3, pp.1063-1081, March 1971.

[13] J.S.Meditch,"Stochastic Linear Estimation and Control," McGraw-Hill Book Co., 1969.

[14] K. Bollinger, R. Lalonde, "Tuning Synchronous Generator Voltage Regulators Using On-Line Generator Models," IEEE Transactions on Power Apparatus and Systems, Vol. PAS-96, No.1, pp.32-37, Jan. 1977.

[15] C.P. Oradat, J. Fitzer,"Determining Power System Stabilizer Parameters by the Root-Locus Method," IEEE Control of Power Systems Conference, pp. 44-48, March 1977.

[16] V.H. Quintana, M.A. Zhody, J.H. Anderson,"On the Design of Output Feedback Excitation Controllers of Synchronous Machines," IEEE PES Winter Meeting, pp.1-8, Jan. 1976.

APPENDIX A

Nomenclature

Table A.1

CONSTANTS USED IN SIMULATION

Symbol	Description	Value in per unit
Excitation system		
K_A	regulator gain	400.0
T_A	regulator time constant	0.02
K_E	exciter gain	1.0
T_E	exciter time constant	0.8
K_F	regulator stabilizer gain	0.03
T_F	regulator stabilizer time constant	1.0
Generator and tieline		
T'_{do}	direct-axis transient open-cicuit time constant	6.5
X_d	direct-axis synchronous reactance of generator	1.6
X'_d	direct-axis transient reactance of generator	0.32
X_q	quadrature-axis synchronous reactance of generator	1.55
X_e	equivalent system reactance	1.0
T_M	generator mechanical time constant	10.0
D	damping factor	2.5
K_1		0.483

K_2	1.0473
K_3	0.5077
K_4	1.34
K_5	-0.334
K_6	0.4107
G_p	7.532
T_1	0.0425
T_2	0.229
T_3	4.145
T_4	0.217
T_R	0.0836

Table A.2

VARIABLES USED IN SIMULATION

Voltages	
V_R	regulator output voltage
$V_{R\ MAX}$	maximum value of V_R
$V_{R\ MIN}$	minimum value of V_R
V_{ref}	regulator reference voltage setting
E_{fd}	exciter output voltage(applied to generator)
E_q'	voltage proportional to direct-axis flux linkages
e_t	generator terminal voltage
e_d, e_q	armature voltage,direct and quadrature-axis components
E	infinite bus voltage
Currents	
i_d, i_q	armature current,direct and quadrature-axis components
I_p	real load current
I_q	reactive load current
Miscellaneous variables	
P_e	electrical power output of generator
T_e	electromechanical torque
N	generator speed
P_m	mechanical power or prime mover torque

APPENDIX B

I. Derivation of Nonlinear Generator and Tieline Model

Assumptions:

(1) Zero-sequence currents and voltages are negligible.

(2) Armature resistance is negligible.

(3) Space wave harmonics are neglected.

(4) Saturation in both axes is neglected.

(5) Induced voltages between the direct and quadrature axes are negligible.

(6) Changes in speed or frequency are assumed very small and do not affect voltages or impedances within the generator.

(7) Inertias from all rotating parts are treated as a single lumped constant.

(8) The infinite bus is a voltage reference and has a fixed frequency of 1 per unit or 60 HZ.

(9) Frequency, speed, and angle have meaning only when referenced to the infinite bus.

(10) No local loads are connected to the generator.

Development of Nonlinear Generator and Tieline Equations:

VOLTAGE EQUATIONS:

As derived in Adkins [5], the direct- and quadrature-axis voltages for a generator are

$$e_d = s\psi_d - v\psi_q - r_a i_d$$

and $$e_q = v\psi_d + s\psi_q - r_a i_q$$

From the assumptions, $s\psi_d = 0$, $s\psi_q = 0$, $r_a = 0$, and $v = 1$. Therefore, above equations reduce to

$$e_d = -\psi_q$$

and $$e_q = \psi_d$$

Adkins described the flux components as

$$\psi_d = -\frac{x_d(s)}{w} i_d + \frac{G(s)}{w} E_{fd}$$

and $$\psi_q = -\frac{x_q(s)}{w} iq$$

with the assumption that $w = 1$. The frequency-dependent rectances and gains may be written as:

$$x_d(s) = x_d' + \frac{x_d - x_d'}{1+sT_{do}'}$$

$$x_q(s) = x_q$$

$$G(s) = \frac{1}{1+T_{do}'s}$$

Combining equations we obtain ,

$$e_d = x_q i_q \quad \ldots\ldots\ldots\ldots\ldots\ldots \quad (B.1)$$

$$e_q = -[x_d' + \frac{x_d - x_d'}{1+sT_{do}'}]i_d + [\frac{1}{1+sT_{do}'}]E_{fd}$$

$$= [\frac{1}{1+sT_{do}'}]E_{fd} - [\frac{x_d - x_d'}{1+sT_{do}'}]i_d - x_d' i_d$$

The voltage proportional to direct axis flux linkages Eq' is given by

$$Eq' = [\frac{1}{1+sT_{do}'}]E_{fd} - [\frac{x_d - x_d'}{1+sT_{do}'}]i_d \quad \ldots\ldots \quad (B.2)$$

Hence $e_q = Eq' - x_d' i_d \quad \ldots\ldots\ldots\ldots\ldots \quad (B.3)$

$$e_t^2 = e_d^2 + e_q^2 \quad \ldots\ldots\ldots\ldots\ldots\ldots \quad (B.4)$$

$$Eq = Eq' + (x_q - x_d')i_d \quad \ldots\ldots\ldots\ldots \quad (B.5)$$

and $Eq = e_q + x_q i_d$

POWER EQUATION

Electrical power is calculated from the equation

$$P_e = E_q i_q \quad \text{(B.6)}$$

CURRENT EQUATIONS:

Currents are calculated from the infinite bus voltage, E_q, and the torque angle.

$$i_d = \frac{E_q - E\cos\delta}{x_e + x_q} \quad \text{(B.7)}$$

$$i_q = \frac{E\sin\delta}{x_e + x_q} \quad \text{(B.8)}$$

FREQUENCY AND ANGLE EQUATIONS:

Frequency is calculated as a deviation from synchronous frequency and represents in the simulation the shaft speed or "internal" frequency. Accelerating power is used to determine frequency by the relations:

$$P_a = P_m - P_e - D \cdot \Delta N \quad \text{(B.9)}$$

$$\Delta N = \frac{P_a}{T_m s} \quad \text{(B.10)}$$

The power angle between the infinite bus and the generator quadrature axis is calculated by the equation

$$\delta = \frac{377 \Delta N}{s} \quad \text{(B.11)}$$

II. Linearization of the Nonlinear Model

In order to obtain a linear mathematical model for the nonlinear system, it is assumed that the state variables deviate only slightly from their operating condition.

Expressing Eqs. (B.1), (B.3), (B.4), (B.5), (B.7) and (B.8) in small oscillation form and giving subscript 'o' for their steady-state values we obtain,

$$\Delta e_d = x_q \Delta i_q \quad \ldots\ldots\ldots\ldots\ldots \quad (B.12)$$

$$\Delta e_q = \Delta E_q' - x_d' \Delta i_d \quad \ldots\ldots\ldots\ldots \quad (B.13)$$

$$2e_{to}\Delta e_t = 2e_{do}\Delta e_d + 2e_{qo}\Delta e_q \quad \ldots\ldots\ldots \quad (B.14)$$

$$\Delta E_q = \Delta E_q' + (x_q - x_d')\Delta i_d \quad \ldots\ldots\ldots\ldots \quad (B.15)$$

$$\Delta i_d = \frac{\Delta E_q - E_o \sin\delta_o \Delta\delta}{x_e + x_q} \quad \ldots\ldots\ldots\ldots \quad (B.16)$$

$$\Delta i_q = \frac{E_o \cos\delta_o \Delta\delta}{x_e + x_q} \quad \ldots\ldots\ldots\ldots\ldots \quad (B.17)$$

First, establishing the relation between Δe_t, $\Delta\delta$, $\Delta E_q'$, eliminate ΔE_q from Eqs. (B.15) and (B.16) and solve for Δi_d

$$\Delta i_d = \frac{\Delta E_q'}{x_e + x_d'} + \frac{E_o \sin\delta_o \Delta\delta}{x_e + x_d'} \quad \ldots\ldots\ldots \quad (B.18)$$

From (B.18) and (B.13) one obtains

$$e_q = \frac{x_e}{x_e+x_d'} \Delta E_q' - \frac{x_d' E_o \sin\delta_o}{x_e+x_d'} \Delta\delta \quad \ldots\ldots \quad (B.19)$$

Eliminating Δi_q from (B.12) and (B.13)

$$\Delta e_d = \frac{x_q E_o \cos\delta_o}{x_e + x_q} \Delta\delta \quad \ldots\ldots\ldots\ldots\ldots \quad (B.20)$$

and substituting (B.19)and (B.20) into (B.14) and solving for Δe_t yields

$$\Delta e_t = [\frac{x_q}{x_e+x_q} \frac{e_{do}}{e_{to}} E_o \cos\delta_o - \frac{x_d'}{x_e+x_d'} \frac{e_{qo}}{e_{to}} E_o \sin\delta_o] \Delta\delta$$

$$+ \frac{x_e}{x_e+x_d'} \frac{e_{qo}}{e_{to}} \Delta E_q'$$

Letting

$$K_5 = \frac{x_q}{x_e+x_q} \frac{e_{do}}{e_{to}} E_o \cos\delta_o - \frac{x_d'}{x_e+x_d'} \frac{e_{qo}}{e_{to}} E_o \sin\delta_o \quad \text{and}$$

$$K_6 = \frac{x_e}{x_e+x_d'} \frac{e_{qo}}{e_{to}} \quad \text{one obtains}$$

$$\Delta e_t = K_5 \Delta\delta + K_6 \Delta E_q' \quad \ldots\ldots\ldots\ldots\ldots \quad (B.21)$$

Next we need to obtain the relation between $\Delta E_q'$, ΔE_{fd} and $\Delta\delta$

Rewriting Eq. (B.2)

$$(1+sT_{do}')\Delta E_q' = \Delta E_{fd} - (x_d - x_d')\Delta i_d$$

and substituting the value of Δi_d from Eq. (B.18) gives

$$[\frac{x_e+x_d}{x_e+x_d'} + sT_{do}']\Delta E_q' = \Delta E_{fd} - \frac{x_d-x_d'}{x_e+x_d'}E_o\sin\delta_o\Delta\delta \quad . \quad (B.22)$$

Now letting

$$K_3 = \frac{x_e+x_d'}{x_e+x_d}$$

and $K_4 = \frac{x_d-x_d'}{x_e+x_d'}E_o\sin\delta_o$

$\therefore$ Eq. (B.22) gives

$$\Delta E_q' = \frac{K_3\Delta E_{fd}}{1+sT_{do}'K_3} - \frac{K_3K_4}{1+sT_{do}'K_3}\Delta\delta \quad . \; . \; . \; . \; . \; . \; . \; . \; . \quad (B.23)$$

Finally to establish the relation between ΔP_e, $\Delta\delta$ and $\Delta E_q'$, write Eq. (B.6) in small oscillation form

$$\Delta P_e = \Delta E_q i_{qo} + E_{qo}\Delta i_q \quad . \; . \; . \; . \; . \; . \; . \; . \; . \; . \; . \; . \; . \quad (B.24)$$

and substitute the values of ΔE_q and Δi_q from Eqs.(B.15) and (B.17) into Eq. (B.24) to yield

$$\Delta P_e = [\frac{x_q-x_d'}{x_e+x_d'} i_{qo}E_o\sin\delta_o + \frac{E_oE_{qo}\cos\delta_o}{x_e+x_q}]\Delta\delta$$

$$+ \frac{E_o\sin\delta_o}{x_e+x_d'}\Delta E_q'$$

Now letting $K_1 = \frac{x_q - x_d'}{x_e + x_d'} i_{qo} E_o \sin\delta_o + \frac{E_o E_{qo} \cos\delta_o}{x_e + x_q}$

$K_2 = \frac{E_o \sin\delta_o}{x_e + x_d'}$, we have the desired result

$$\Delta P_e = K_1 \Delta\delta + K_2 \Delta E_q' \quad . . . . . \quad (B.25).$$

All the values of constants K_1 through K_6 are now determined, which give the approximation used to obtain the linear model from the nonlinear model. The linearized generator model connected to an infinite bus is given in Fig. 2.4.

TO OBTAIN OPERATING VALUES

The steady-state operating values of δ_o, E_{qo}, E_o, e_{do}, e_{qo} are derived from a standard machine vector diagram [1]. Expressed as a function of steady-state terminal voltage e_{to} and steady-state real and reactive load currents I_{po} and I_{qo}, these values are:

$$E_{qo} = [(e_{to} + I_{qo} x_q)^2 + (I_{po} x_q)^2]^{1/2}$$

$$E_o = [(e_{to} - I_{qo} x_e)^2 + (I_{po} x_e)^2]^{1/2}$$

$$\text{Sin } \delta_o = \frac{e_{to} I_{po} (x_q + x_e)}{E_{qo} E_o}$$

$$\text{Cos } \delta_o = \frac{e_{to}[e_{to} - I_{qo}(x_q - x_e)]}{E_{qo} E_o} - \frac{x_e x_q (I_{po}^2 + I_{qo})^2}{E_{qo} E_o}$$

$$i_{qo} = \frac{I_{po}(e_{to} + I_{qo}x_q) - I_{qo}I_{po}x_2}{E_{qo}}$$

$$i_{do} = \frac{I_{po}{}^2x_q + I_{qo}(e_{to} + I_{qo}x_q)}{E_{qo}}$$

$$e_{qo} = \frac{(e_{to} + I_{qo}x_q)e_{to}}{E_{qo}}$$

$$e_{do} = i_{qo}x_q$$

APPENDIX C

Frequency Response Technique Used in [1]

In [1] frequency response curves of the loaded generator and its excitation system are developed to provide basic data for parameter selection. The frequency at which the electro-mechanical resonance between the machine and the closely coupled infinite bus occurs is determined. The damping influence of the AVR was then obtained from the frequency response curves by the relation $\frac{M \sin \theta}{w_n}$ where M is the magnitude ratio of the terminal voltage response to the regulator input driving signal, θ is the phase-lag of that response, and w_n is the natural frequency of oscillation in rad/sec. It was found that the damping influence is negative over all the frequency range of interest. Negative damping was primarily due to phase-lag characteristics of the voltage regulator and excitation system. The overall phase-lag of the excitation system and transducer(used to measure frequency deviation) is compensated by two lead-lag stages of the PSS.

Hence an overall lead-lag circuit is designed which serves as a PSS,with frequency deviation serving as input and, supplies as an output a control signal which supplements the voltage error signal.

Derivation of State Equations Associated with Power System Stabilizer

$$x_7 = \frac{sT_R}{1 + sT_R} x_5$$

$$x_8 = \frac{1 + sT_3}{1 + sT_4} x_7$$

$$x_9 = \frac{G_p(1 + sT_1}{(1 + sT_2} x_8$$

By inverse Laplace transformation of the above equations, we obtain the following set of differential equations:

$$\dot{x}_7 = -\frac{K_2}{T_M K_6} - \frac{D}{T_M} x_5 + \left(\frac{K_2 K_5}{K_6 T_M} - \frac{K_1}{T_M}\right) x_6 - \frac{x_7}{T_R} + \frac{P_M}{T_M} \quad (C.1)$$

$$\dot{x}_8 = -\frac{T_3 K_2}{T_4 T_M K_6} x_4 - \frac{T_3 D}{T_4 T_M} x_5 + \frac{T_3}{T_4}\left(\frac{K_2 K_5}{K_6 T_M} - \frac{K_1}{T_M}\right) x_6$$

$$+\left(\frac{1}{T_4} - \frac{T_3}{T_4 T_R}\right) x_7 - \frac{1}{T_4} x_8 + \frac{T_3}{T_4 T_M} P_M \quad (C.2)$$

$$\dot{x}_9 = -\frac{G_p T_1 T_3 K_2}{T_2 T_4 T_M K_6} x_4 - \frac{G_p T_1 T_3 D}{T_2 T_4 T_M} x_5 + \frac{G_p T_1 T_3}{T_2 T_4}\left(\frac{K_2 K_5}{K_6 T_M}\right) x_6$$

$$+ \frac{G_p T_1}{T_2}\left(\frac{1}{T_4} - \frac{T_3}{T_4 T_R}\right) x_7 - \left(\frac{G_p T_1}{T_2 T_4} - \frac{G_p}{T_2}\right) x_8$$

$$-\frac{1}{T_2} x_9 + \frac{G_p T_1 T_3}{T_2 T_4 T_M} P_M \quad \ldots\ldots (C.3)$$

Pattern Search Technique

Hooke and Jeeves [3] have devised a logical method for staying on the crest of a sharp ridge while searching for an optimum. The pattern search technique is based

on the hopeful conjecture that any set of moves; that is, adjustments of the independent variables, which have been successful during early experiments will be worth trying again. This strategy is successful on straight ridges because the only way an early pattern of moves can succeed is if it lies along the crest. Hence further moves in the same direction will be worthwhile if the ridge is straight.

Although the method starts cautiously with short excursions from the starting point, the steps grow with repeated success. Subsequent failure indicates that shorter steps are in order, and if a change in direction is required the technique will start over again with a new pattern. In the vicinity of the peak the steps become very small to avoid overlooking any promising direction.

A description of a pattern search routine, which has been applied, is given in the flow chart C.1. The sequence following the label (2) is the basic iterative loop consisting of a pattern move followed by a set of exploratory moves. The sequence following the label (1) is for an initial set of exploratory moves from a base point when a new pattern must be established. The sequence labeled (3) controls the reduction of step size and termination of search.

The remaining Charts C.2, C.3 give details of the procedure. Explicitly the procedure is carried out by sequentially transforming a set of variables. These variables and their value interpretations are given in Table C-I. Chart C.2 has been drawn to parallel chart C.1. A detailed flow diagram in terms of the problem variables is exhibited. Notations are explained in Table C-I.

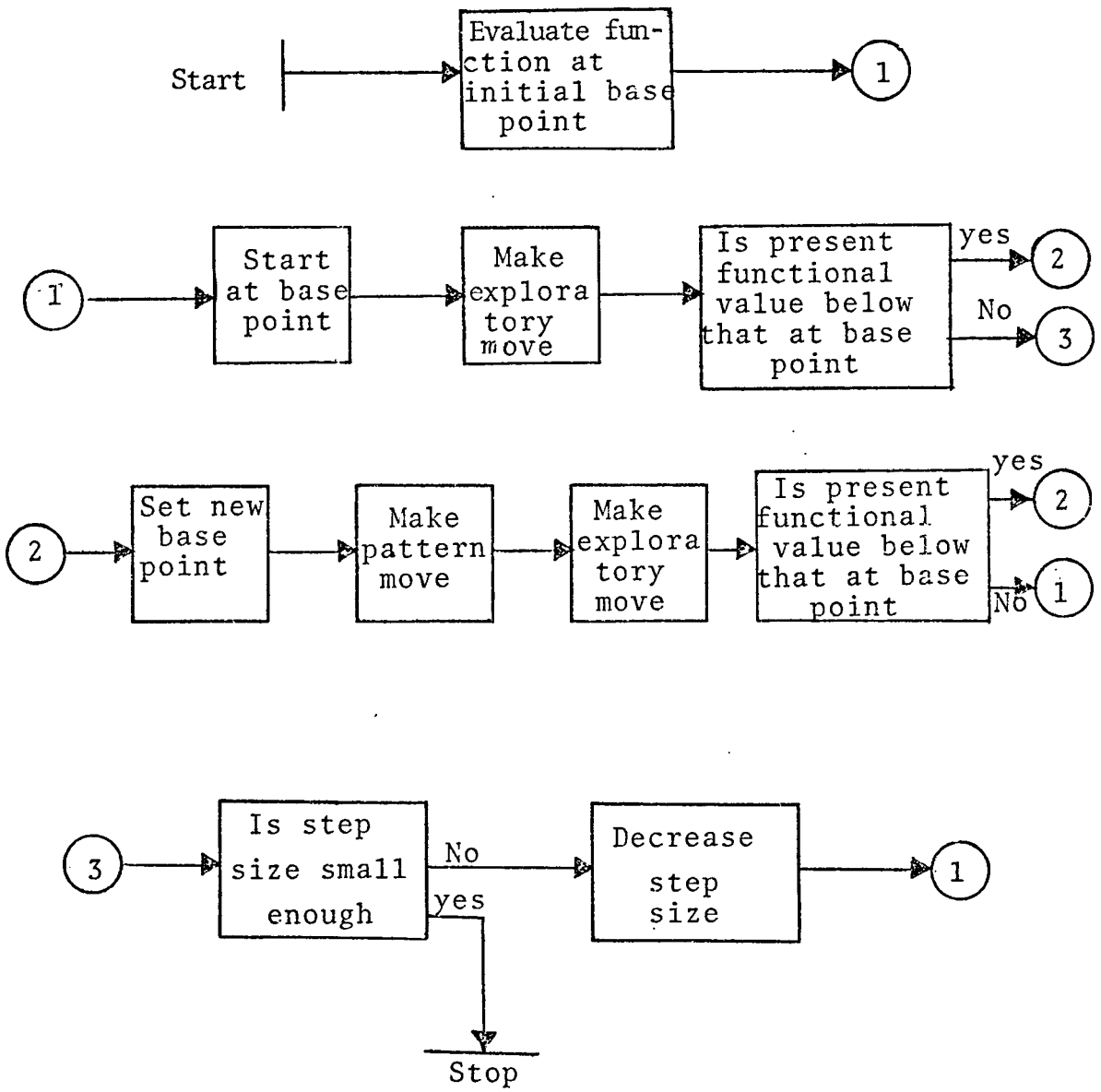

Chart C.1 Descriptive flow diagram of pattern search

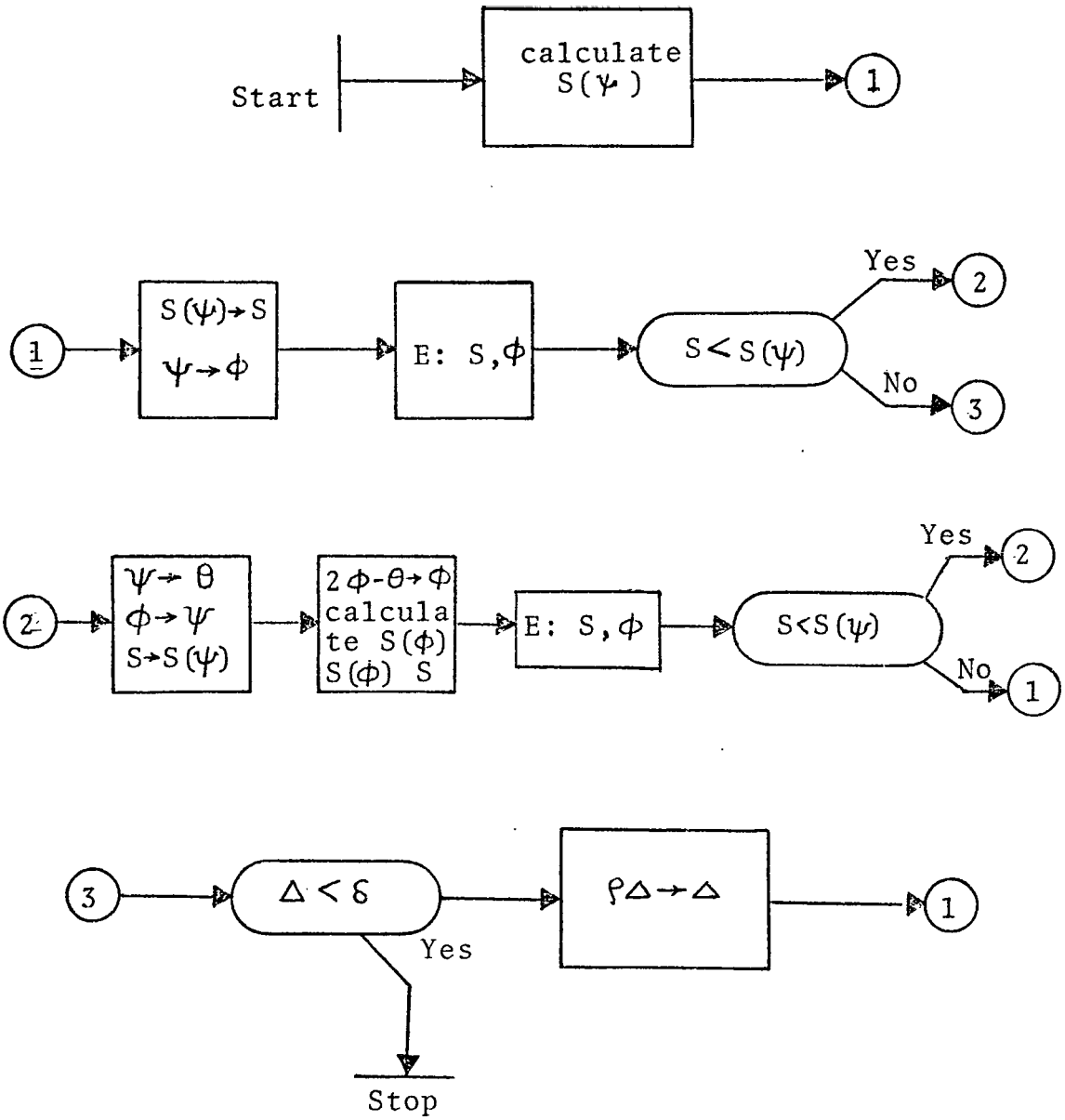

Chart C,2 Detailed flow diagram for pattern search

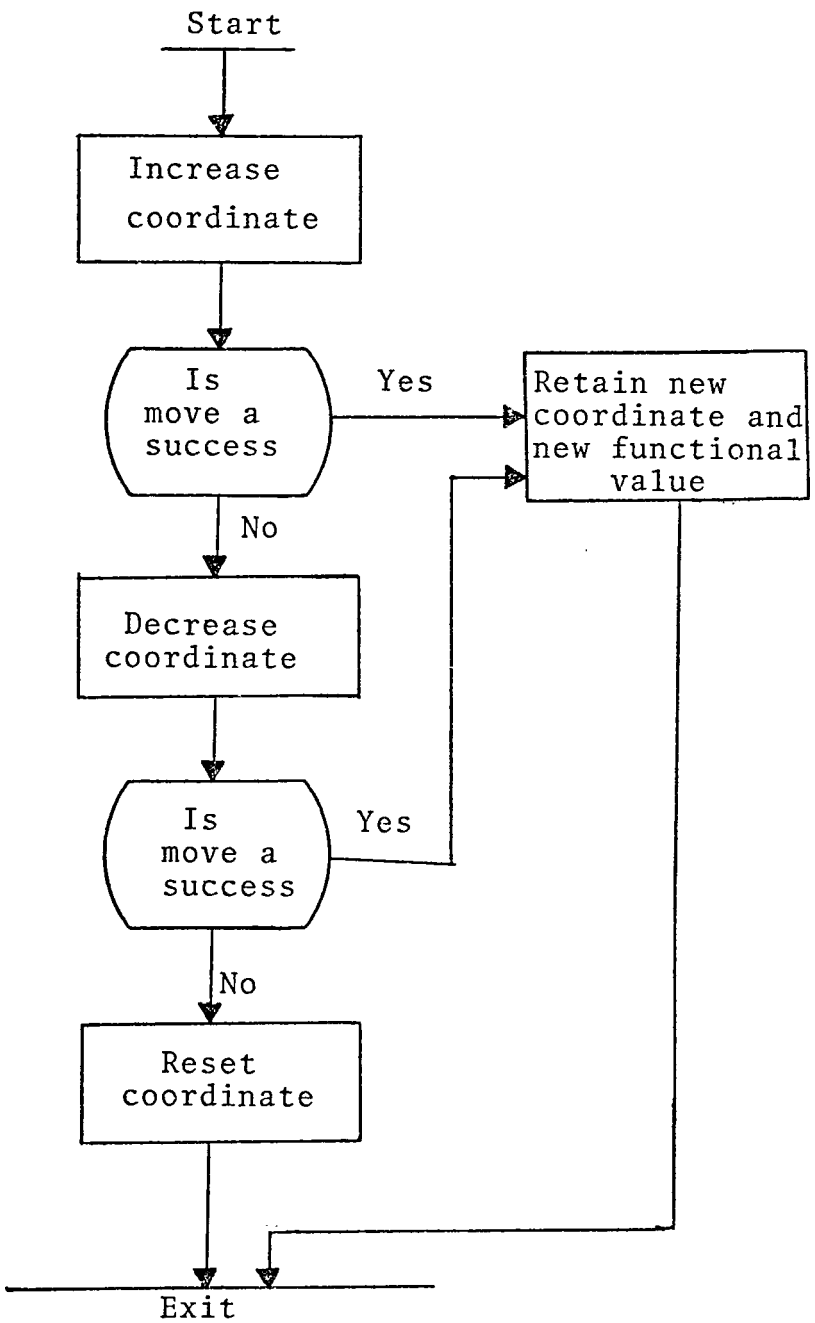

Chart C.3 Descriptive flow diagram for exploratory move (Program E)

Table C-I

θ	the previous base point
ψ	the current base point
ϕ	the base point resulting from current move
$S(\psi)$	the functional value at the base point
$S(\phi)$	the functional value for this move
S	the functional value before this move
Δ	current step size
δ	minimum step size
ρ	reduction factor for step size

APPENDIX I

The Computer Program to find Eigenvalues of the System and the Constants K_1 through K_6

```
      DIMENSION A(6,6)
      REAL K1,K2,K3,K4,K5,K6,
      REAL IPO,IQO,IQOS,IDOS
      COMMON/INOU/KIN,KOUT
      COMMON/MAIN1/NDIM,DUM1(6,6)
      COMMON/MAIN2/DUM2(6,6)
      KIN = 5
      KOUT = 6
      NDIM=6
      ETO = 1.0
      RES = 0.0
      XD=1.6
      XD1=0.32
      XQ=1.55
      D=2.5
      TDO1=6.5
      TM=10.0
      IPO=1.0
      IQO=0.0
      XES=1.0
      EQO=SQRT((ETO+IQO*XQ)**2+(IPO*XQ)**2)
      EO=SQRT((ETO-IQO*XES)**2+(IPO*XES)**2)
      SIND=((ETO*IPO)/(EQO*EO))*(XQ+XES)
      COSD=(ETO/(EQO*EO))*(ETO-IQO*(XQ-XES))-((XES*XQ)/(EQO*EO))
     1*(IPO*IPO+IQO*IQO)
      IDOS=(1./EQO)*(IPO*IPO*XQ+IQO*(ETO+IQO*XQ))
      IQOS = (IPO*(ETO+IQO*XQ)-IQO*IPO*XQ)/EQO
      EQOS = ((ETO+IQO*XQ)/EQO)*ETO
      EDOS = IQOS*XQ
      K1 = (XQ-XD1)*IQOS*EO*SIND/(XES+XD1)+(EQO*EO*COSD)/(XES+XQ)
      K2 = (EO*SIND)/(XES+XD1)
      K3 = (XD1+XES)/(XD+XES)
      K4 = ((XD-XD1)*EO*SIND)/(XES+XD1)
      K5 =(XQ/(XES+XQ))*(EDOS/ETO)*EO*COSD -XD1/(XES+XD1) *(EQOS/ETO)
     1  *EO*SIND
      K6 =(XES/(XES+XD1))*(EQOS/ETO)
      WRITE(6,201) EQO,EO,SIND,COSD,IQOS,IDOS,EQOS,EDOS
201   FORMAT(//,' EQO=',F20.8,/,' EO=',F20.8,/,' SIND=',E20.8,/,
     *     ' COSD=',E20.8,/,' IQOS=',E20.8,/,' IDOS=',E20.8,/,' EQOS=',
     *     E20.8,/,' EDOS=',E20.8)
      WRITE(6,101) K1,K2,K3,K4,K5,K6
101   FORMAT(5X,'K1=',E15.8,/,5X,'K2=',F15.8,/,5X,
     *  'K3=',E15.8,/,5X,'K4=',E15.8,/,5X,'K5=',E15.8,/,5X,
     *    'K6=',E15.8)
      DO 1 I=1,6
      DO 1 J=1,6
      A(I,J)=0.0
    1 CONTINUE
      A(1,1)=-50.0
      A(1,3)=-20000.
      A(1,4)=-20000.
      A(2,1)=1.25
      A(2,2)=-1.25
      A(3,1)=0.0375
```

```
      A(3,2)=-0.0375
      A(3,3)=-1.0
      A(4,2)=K6/TD01
      A(4,4)=-1.0/(K3*TD01)
      A(4,5)=377.0*K5
      A(4,6)=K5/(K3*TD01)-(K6*K4)/TD01
      A(5,4)=-K2/(TM*K6)
      A(5,5)=-D/TM
      A(5,6)=(K2*K5)/(K6*TM)-K1/TM
      A(6,5)=377.0
      WRITE(6,15)
   15 FORMAT(///,1X,'MATRIX A',/)
      CALL EIGVAL(6,A)
   12 FORMAT(1,'K=',F8.1,4X,'T=',F8.1)
      END
```

APPENDIX II

The Computer Program to Design Stabilizer Type I (DS)

```
C-----------------------------------------------------------------------
C---- PROGRAM PARSCH                                                 -----
C----- THIS PROGRAM USES THE PATTERN SEARCH TECHNIQUE TO DETERMINE    --
C----- THE SIX PARAMETERS OF THE POWER SYSTEM STABLIZER.              --
C-----------------------------------------------------------------------
      REAL KA,KE,KF,K1,K2,K3,K4,K5,K6
      DIMENSION COMPAR(10),DELTA(10),DIVI(10),XB(10)
      COMMON/SUB1/A(10,10),DIS(10,2000)
      COMMON/SUB2/W(10,2000),NDIM,H,NOS
      COMMON/SUB3/KA,KE,KF,K1,K2,K3,K5,K6,TA,TDO1,TE,TF,TM,T,D,K4
      COMMON/SUB5/DPM(2000)
C-----------------------------------------------------------------------
C--- NDIM IS NO. OF POINTS
C--- H IS STEP SIZE
C---- NOS IS THE NUMBER OF STATES
C--- M IS THE NO. OF PARAMETERS TO BE SEARCHED
C-----------------------------------------------------------------------
      NDIM = 1900
      H = 0.003
      NOS=9
C-----------------------------------------------
C---SET PARAMETER VALUES OF THE SYSTEM      ---
C-----------------------------------------------
      D = 2.5
      KA= 400.0
      K1=0.4827
      K2 = 1.0473
      K3 = 0.5077
      K4 = 1.34
      K5 = -0.334
      K6 = 0.4107
      KE=1.0
      KF=0.03
      TA=0.02
      TDO1 = 6.5
      TE=0.8
      TF=1.0
      TM = 10.0
C
C---- SET UP SYSTEM MATRIX,DISTURBANCE AND INITIAL VALUES OF PARAMETERS
C---- TO BE SEARCHED
      M=6
      GP=12.766
      T1=0.036
      T2=0.21
      T3=3.343
      T4=0.262
      TR=0.0629
      DO 21 I=1,9
   21 DPM(I) = -0.4
      DO 22 I=1,NOS
      DO 22 J=1,NDIM
   22 DIS(I,J) = 0.0
```

```
      DO 23 J=1,NDIM
      DIS(5,J)=DPM(J)/TM
      DIS(7,J) = DPM(J)/TM
      DIS(8,J) = (T3*DPM(J))/(T4*TM)
23     DIS(9,J)=(GP*T1*T3*DPM(J))/(T2*T4*TM)
      DO 1 I=1,NOS
      DO 1 J=1,NOS


      A(I,J) = 0.0
 1    CONTINUE
      A(1,1) = -1.0/TA
      A(1,3) = -KA/TA
      A(1,4) = -KA/TA
      A(1,9)  =  KA/TA
      A(2,1) = 1.0/TE
      A(2,2) = -KE/TE
      A(3,1) = KF/(TE*TF)
      A(3,2) = (-KE*KF)/(TE*TF)
      A(3,3) = -1.0/TF
      A(4,2) =  K6/TDO1
      A(4,4) = -1.0/(K3*TDO1)
      A(4,5) = 377.0*K5
      A(4,6) = K5/(K3*TDO1) - (K6*K4)/TDO1
      A(5,4) = -K2/(TM*K6)
      A(5,5) = -D/TM
      A(5,6) = (K2*K5)/(K6*TM) - K1/TM
      A(6,5) = 377.0
      A(7,4) = -K2/(TM*K6)
      A(7,5) = -D/TM
      A(7,6) = -K1/TM+(K2*K5)/(K6*TM)
      A(7,7) = -1.0/TR
      A(8,4) = -(K2*T3)/(TM*T4*K6)
      A(8,5) = -(D*T3)/(TM*T4)
      A(8,6) = -(K1*T3)/(T4*TM)+(T3*K2*K5)/(T4*K6*TM)
      A(8,7) = (1.0/T4)*(1.0-T3/TR)
      A(8,8) = -1.0/T4
       A(9,4)= -(GP*K2*T1*T3)/(T2*T4*TM*K6)
       A(9,5)= -(D*GP*T1*T3)/(T2*T4*TM)
       A(9,6) = ((GP*T1*T3)/(T2*T4))*(((K2*K5)/(K6*TM))-K1/TM)
       A(9,7)= ((GP*T1)/(T2*T4))*(1.0-T3/TR)
       A(9,8)= (GP/T2)*(1.0-T1/T4)
        A(9,9) = -1.0/T2
      XB(1) = GP
      XB(2) = T1
      XB(3) = T2
      XB(4) = T3
      XB(5) = T4
      XB(6) = TR

      DO 5 I=1,M
```

```
      DIVI(I) = 10.0
    5 CONTINUE
      DO 6 I=1,M
      COMPAR(I)=1.0E-6
    6 DELTA(I)= XB(I)*10.0
      WRITE(6,11)
   11 FORMAT(//,'  INITIAL CHOICES OF PARAMETERS')
      WRITE(6,101) (XB(I),I=1,M)
      WRITE(6,12)
   12 FORMAT(//,'  DELTA')
      WRITE(6,101) (DELTA(I),I=1,M)
      WRITE(6,14)
   14 FORMAT(//,'  DIVI')
      WRITE(6,101)  (DIVI(I),I=1,M)
      WRITE(6,13)
   13 FORMAT(//,'  COMPAR')
      WRITE(6,101)(COMPAR(I),I=1,M)
  101 FORMAT(6(5X,E15.8))
      CALL PARSCH(M,XB,DELTA,DIVI,COMPAR)
      WRITE(6,103)

  103 FORMAT(//,' MATRIX A')
      WRITE(6,102) ((A(I,J),J=1,NOS),I=1,NOS)
  102 FORMAT( 9(2X,E10.3))
      END
      SUBROUTINE FUNVAL(XB,N,RJ)
      REAL KA,KE,KF,K1,K2,K3,K4,K5,K6
      DIMENSION XB(10),X(10)
      COMMON/SUB1/A(10,10),DIS(10,2000)
      COMMON/SUB2/M(10,2000),NDIM,H,NOS
      COMMON/SUB3/KA,KE,KF,K1,K2,K3,K5,K6,TA,TD01,TE,TF,TM,T,D,K4
      COMMON/SUB5/DPM(2000)
      COMMON/SUB6/DJ(2000)
      COMMON/SUB7/INDEX,OVER
C
C---- RESET PARAMETER VALUES,SYSTEM MATRIX, AND DISTURBANCE
      GP = XB(1)
      T1 = XB(2)
      T2 = XB(3)
      T3 = XB(4)
      T4 = XB(5)
      TR = XB(6)
      A(7,4) = -K2/(TM*K6)
      A(7,5) = -D/TM
      A(7,6) = -K1/TM+(K2*K5)/(K6*TM)
      A(7,7) = -1.0/TR
      A(8,4) = -(K2*T3)/(TM*T4*K6)
      A(8,5) = -(D*T3)/(TM*T4)
      A(8,6) = -(K1*T3)/(T4*TM)+(T3*K2*K5)/(T4*K6*TM)
      A(8,7) = (1.0/T4)*(1.0-T3/TR)
```

```
      A(8,8) = -1.0/T4
      A(9,4)= -(GP*K2*T1*T3)/(T2*T4*TM*K6)
      A(9,5)= -(D*GP*T1*T3)/(T2*T4*TM)
      A(9,6) = ((GP*T1*T3)/(T2*T4))*(((K2*K5)/(K6*TM))-K1/TM)
      A(9,7)= ((GP*T1)/(T2*T4))*(1.0-T3/TR)
      A(9,8)= (GP/T2)*(1.0-T1/T4)
       A(9,9) = -1.0/T2
      DO 23 J=1,NDIM
      DIS(5,J)=DPM(J)/TM
      DIS(7,J) = DPM(J)/TM
      DIS(8,J) = (T3*DPM(J))/(T4*TM)
   23  DIS(9,J)=(GP*T1*T3*DPM(J))/(T2*T4*TM)
C
      DO 9 I=1,NOS
    9 X(I) = 0.0
      DO 18 I=1,NOS
   18 W(I,1)=X(I)
      CALL RUNGE(X)
      IF(INDEX.EQ.1) GO TO 14
C
      DO 7 I1=1,NDIM
      DJ(I1)=W(1,I1)*W(1,I1)+W(2,I1)*W(2,I1)+W(3,I1)*W(3,I1)+W(4,I1)*
     1 W(4,I1)+W(5,I1)*W(5,I1)+W(6,I1)*W(6,I1)
    7 CONTINUE
      CALL SIMPS(RJ)
C
    6 CONTINUE
      RETURN
   14 INDEX = 1
      RETURN
      END
      SUBROUTINE PARSCH(N,XB,DELTA,DIVI,COMPAR)
      REAL KA,KE,KF,K1,K2,K3,K4,K5,K6
      DIMENSION XB(10),DELTA(10),DIVI(10),COMPAR(10)
      DIMENSION X1(10),XE(10),XP(10)
      COMMON/SUB1/A(10,10),DIS(10,2000)
      COMMON/SUB2/W(10,2000),NDIM,H,NOS
      COMMON/SUB3/KA,KE,KF,K1,K2,K3,K5,K6,TA,TDO1,TE,TF,TM,T,D,K4
      COMMON/SUB7/INDEX,OVER
      OVER = 1.0E+20
      ITER = 0
      INDEX = 0
      CALL FUNVAL(XB,N,YB)
    1 INDEX = 0
      CALL EXPLO(XB,DELTA,N,XE,YE)
      IF(INDEX.EQ.1) GO TO 3
      ITER = ITER + 1
      WRITE(6,201)
  201 FORMAT(//,' ----------------------------------------------------')
      WRITE(6,102) ITER,YE
  102 FORMAT(' ITERATION =',I5,/,' FUNCTION VALUE = ',E20.8)
      WRITE(6,103)
  103 FORMAT(/,' VALUE OF X')
```

```
      WRITE(6,101) (XE(K),K=1,N)
  101 FORMAT(6(2X,E15.8))
      WRITE(6,202)
  202 FORMAT(/,' SYSTEM MATRIX')
      WRITE(6,104) ((A(I,J),J=1,NOS),I=1,NOS)
  104 FORMAT( 9(2X,E10.3))
      IF(YE-YB) 2,3,3
    2 YB = YE
      DO 11 I=1,N
      X1(I) = XB(I)
      XB(I) = XE(I)
   11 CONTINUE
      CALL PATTER(X1,XB,N,XP)
      CALL EXPLO(XP,DELTA,N,XE,YE)
      IF(INDEX.EQ.1) GO TO 3
      IF(YB .GT. YE) GO TO 10
      GO TO 1
   10 ITER = ITER+1
      WRITE(6,201)
      WRITE(6,102) ITER,YE
      WRITE(6,103)
      WRITE(6,101) (XE(K),K=1,N)
      WRITE(6,202)
      WRITE(6,104) ((A(I,J),J=1,NOS),I=1,NOS)
      GO TO 2
    3 DO 5 I=1,N
      IF(DELTA(I) .GT. COMPAR(I)) GO TO 6
    5 CONTINUE
      GO TO 7
    6 DO 8 I=1,N
      DELTA(I) = DELTA(I)/DIVI(I)
    8 CONTINUE
      GO TO 1
    7 WRITE(6,101) (XB(K),K=1,N)
      RETURN
      END
      SUBROUTINE PATTER(XI,XF,N,X)
      DIMENSION XI(10),XF(10),X(10)
      DO 1 I=1,N
    1 X(I) = XF(I)*2.0-XI(I)
      RETURN
      END
      SUBROUTINE EXPLO(X,DELTA,N,X1,Y)
      DIMENSION X(10),X1(10),DELTA(10)
      REAL KA,KE,KF,K1,K2,K3,K4,K5,K6
      COMMON/SUB1/A(10,10),DIS(10,2000)
      COMMON/SUB2/W(10,2000),NDIM,H,NOS
      COMMON/SUB3/KA,KE,KF,K1,K2,K3,K5,K6,TA,TDO1,TE,TF,TM,T,D,K4
      COMMON/SUB7/INDEX,OVER
      CALL FUNVAL(X,N,Y)
```

```
      IF(INDEX.EQ.1) GO TO 6
      DO 10 J=1,N
   10 X1(J) = X(J)
      DO 1 I=1,N
      X1(I) = X1(I) + DELTA(I)
      CALL FUNVAL(X1,N,Y1)
      IF(INDEX.EQ.1) GO TO 6
      IF(Y1-Y) 2,3,3
    2 Y = Y1
      GO TO 1
    3 X1(I) = X1(I) -2.0*DELTA(I)
      CALL FUNVAL(X1,N,Y1)
      IF(INDEX.EQ.1) GO TO 6
      IF(Y1-Y) 4,5,5
    4 Y = Y1
      GO TO 1
    5 X1(I) = X1(I) + DELTA(I)
    1 CONTINUE
    6 CONTINUE
      RETURN
      END
      SUBROUTINE XDOT(X,XDOO,L)
      DIMENSION X(10),XDOO(10)
      REAL KA,KE,KF,K1,K2,K3,K4,K5,K6
      COMMON/SUB1/A(10,10),DIS(10,2000)
      COMMON/SUB2/W(10,2000),NDIM,H,NOS
      COMMON/SUB3/KA,KE,KF,K1,K2,K3,K5,K6,TA,TDO1,TE,TF,TM,T,D,K4
      COMMON/SUB7/INDEX,OVER
      DO 2 I=1,NOS
      XDOO(I)=0.0
```

```
      DO 1 J=1,NOS
      XDOO(I) = XDOO(I)+A(I,J)*X(J)
      C1 = XDOO(I)
      IF(C1 .GT. OVER) GO TO 3
    1 CONTINUE
      XDOO(I) = XDOO(I) + DIS(I,L)
      C1 = XDOO(I)
      IF(C1 .GT. OVER) GO TO 3
    2 CONTINUE
      RETURN
    3 INDEX = 1
      WRITE(6,4) C1
    4 FORMAT(//,' OVERFLOW PROCTATION AT XDOT',E20.8)
      RETURN
      END
```

```
      SUBROUTINE RUNGE(XI)
      REAL KA,KE,KF,K1,K2,K3,K4,K5,K6
      DIMENSION XI(10),FX(10),XA(10)
      DIMENSION XD1(10),XD2(10),XD3(10),XD4(10)
      COMMON/SUB1/A(10,10),DIS(10,2000)
      COMMON/SUB2/W(10,2000),NDIM,H,NOS
      COMMON/SUB3/KA,KE,KF,K1,K2,K3,K5,K6,TA,TD01,TE,TF,TM,T,D,K4
      COMMON/SUB7/INDEX,OVER
      DO 10 J=1,NOS
   10 W(J,1) = XI(J)
      DO 50 I=2,NDIM
      III = I
      CALL XDOT(XI,FX,III)
      IF(INDEX.EQ.1) GO TO 8
      DO 1 J=1,NOS
      XD1(J) = H*FX(J)
    1 XA(J) = XI(J)+0.5*XD1(J)
      CALL XDOT(XA,FX,III)
      IF(INDEX.EQ.1) GO TO 8
      DO 2 J=1,NOS
      XD2(J) = H*FX(J)
    2 XA(J) = XI(J) + 0.5*XD2(J)
      CALL XDOT(XA,FX,III)
      IF(INDEX.EQ.1) GO TO 8
      DO 3 J=1,NOS
      XD3(J) = H*FX(J)
    3 XA(J) = XI(J) + XD3(J)
      CALL XDOT(XA,FX,III)
      IF(INDEX.EQ.1) GO TO 8
      DO 5 J=1,NOS
    5 XD4(J) = H*FX(J)
      DO 4 J=1,NOS
      XI(J) = XI(J) +(1.0/6.0)*(XD1(J)+2.0*XD2(J)+2.0*XD3(J)+XD4(J))
    4 W(J,I) = XI(J)
   50 CONTINUE
    6 CONTINUE
      RETURN
    8 INDEX = 1
      RETURN
      END
      SUBROUTINE SIMPS(RJ)
      COMMON/SUB6/DJ(2000)
      COMMON/SUB2/W(10,2000),NDIM,H,NOS
      COMMON/SUB7/INDEX,OVER
```

```
      NDIM1 = NDIM-1
      NDIM2 = NDIM-2
      RJ =(DJ(1)+4.0*DJ(2)+4.0*DJ(NDIM1)+DJ(NDIM))*(H/3.0)
      DO 50 I=3,NDIM2
      RJ = RJ +2.0*(H/3.0)*DJ(I)
      IF(RJ.GT.OVER) GO TO 51
   50 CONTINUE
      RETURN
   51 INDEX = 1
      WRITE(6,52)
   52 FORMAT(//,' OVERFLOW PROCTATION AT SIMPS')
      RETURN
      END
```

APPENDIX III

The Computer Program to find Optimal Feedback Gains for Stabilizer Type II

```
      IMPLICIT REAL*8 (A-H,O-Z)
      DIMENSION A(12,12),B(12,12),D(12,12),E(12,12)
      DIMENSION L1(12),M1(12),L2(12),M2(12)
      DIMENSION B2(12,12),L3(6),M3(6)
      DIMENSION P(6,6),N(6,6),ETA(1,6),ETAT(6,1),ETAP(1,6),ETAQ(1,6)
      DIMENSION R(1,1),BT(1,6),RBT(1,6)
      M=6
      N=12
      MR=1
      READ(5,1) MAX,EPS
    1 FORMAT(I5,F15.7)
      WRITE(6,1) MAX,EPS
      READ(5,10) (ETA(1,J),J=1,M)
   10 FORMAT(6F8.4)
      WRITE(6,5000) (ETA(1,J),J=1,M)
 5000 FORMAT(6F13.5,//)
      READ(5,11) (ETAT(I,1),I=1,M)
   11 FORMAT(F8.0)
      WRITE(6,5001) (ETAT(I,1),I=1,M)
 5001 FORMAT((6F13.5,/),//)
      READ(5,12) ((R(I,J),J=1,MR),I=1,MR)
   12 FORMAT(F8.3)
      WRITE(6,5002) ((R(I,J),J=1,MR),I=1,MR)
 5002 FORMAT (F13.5,//)
      READ(5,27) ((BT(I,J),J=1,M),I=1,MR)
   27 FORMAT(6F10.4)
      WRITE(6,5003) ((BT(I,J),J=1,M),I=1,MR)
 5003 FORMAT(6(3X,E13.6),//)
      READ(5,27) ((A(I,J),J=1,N),I=1,N)
      A(7,1)=20000.*20000.
      DO 265 ITER=1,10
      WRITE(6,5004) ((A(I,J),J=1,N),I=1,N)
 5004 FORMAT(12(6(3X,E13.6),/,6(3X,E13.6),/),//)
      DO 20 I=1,N
      DO 20 J=1,N
   20 B(I,J)=A(I,J)
      DO 29 K=1,MAX
      DO 32 I=1,N
      DO 32 J=1,N
   32 E(I,J)=B(I,J)
      CALL MINV(E,N,Z1,L1,M1)
      DO 30 I=1,N
      DO 30 J=1,N
   30 B(I,J)=0.5*(B(I,J)+E(I,J))
      CALL GMPRD(B,B,B2,N,N,N)
      BB=0.0
      BA=0.0
      DO 300 I=1,N
      BA=BA+B(I,I)
  300 BB=BB+B2(I,I)
      DEL=DABS(BB-12.0)
      WRITE(6,5005) DEL,BA
 5005 FORMAT(F13.5,/)
      IF (DEL .LE. EPS) GO TO 31
   29 CONTINUE
```

```
 31 WRITE(6,60)  ((A(I,J),J=1,N),I=1,N)
    WRITE(6,61) ((B(I,J),J=1,N),I=1,N)
    WRITE(6,1) K,DEL
 60 FORMAT(1X,9HMATRIX A:,/,12(6(3X,E13.6),/,6(3X,E13.6),/),//)
```

```
 61 FORMAT(1X,9HMATRIX B:,/,12(6(3X,E13.6),/,6(3X,E13.6),/),//)
    DO 70 I=1,N
    DO 70 J=1,N
 70 E(I,J)=0.0
    DO 80 I=1,M
 80 E(I,I)=-1.0
    DO 90 I=6,N
 90 E(I,I)=1.0
    DO 40 I=1,N
    DO 40 J=1,N
 40 E(I,J)=E(I,J)+B(I,J)
    CALL MINV(E,N,Z2,L2,M2)
    DO 100 I=1,N
    DO 100 J=1,N
100 D(I,J)=2.0*E(I,J)
    WRITE(6,63) ((D(I,J),J=1,N),I=1,N)
 63 FORMAT(1X,9HMATRIX D:,/,12(6(3X,E13.6),/,6(3X,E13.6),/),//)
    DO 200 IX=1,M
    DO 200 IY=1,M
    P(IX,IY)=D(IX,IY+6)
200 Q(IX,IY)=-D(IX+6,IY)
    CALL MINV(Q,M,Z3,L3,M3)
    WRITE(6,201) ((P(I,J),J=1,M),I=1,M)
201 FORMAT(1X,9HMATRIX P:,/,6(6(3X,E13.6),/))
    WRITE(6,202) ((Q(I,J),J=1,M),I=1,M)
202 FORMAT(1X,9HMATRIX Q:,/,6(6(3X,E13.6),/))
    CALL GMPRD(ETA,P,ETAP,1,M,M)
    CALL GMPRD(ETAP,ETAT,EPE,1,M,1)
    CALL GMPRD(ETA,Q,ETAQ,1,M,M)
    CALL GMPRD(ETAQ,ETAT,EQE,1,M,1)
    WRITE(6,203) EPE,EQE
203 FORMAT(1X,'EPE=',E15.8,10X,'EQE=',E15.8)
    DO 250 I=1,6
250 A(I,I)=A(I,I)+0.05
    DO 260 I=1,6
    J=I+6
260 A(J,J)=A(J,J)-0.05
265 CONTINUE
    STOP
    END
```

```
C
      SUBROUTINE GMPRD(A,B,R,N,M,L)
      IMPLICIT REAL*8 (A-H,O-Z)
      DIMENSION A(1),B(1),R(1)
C
      IK=L
      IK=-M
      DO 10 K=1,L
      IK=IK+M
      DO 10 J=1,N
      IB=IB+1
      JI=J-M
      IB=IK
```

```
      R(IK)=0
      DO 10 I=1,M
      JI=JI+N
      IB=IB+1
   10 R(IK)=R(IK)+A(JI)*B(IB)
      RETURN
      END
```

```
C
      SUBROUTINE MINV(A,N,D,L,M)
      DIMENSION A(1),L(1),M(1)
C
C        ..............................................................
C
```

```
C        IF A DOUBLE PRECISION VERSION OF THIS ROUTINE IS DESIRED, THE
C        C IN COLUMN 1 SHOULD BE REMOVED FROM THE DOUBLE PRECISION
C        STATEMENT WHICH FOLLOWS.
C
      DOUBLE PRECISION A,D,BIGA,HOLD
C
C        THE C MUST ALSO BE REMOVED FROM DOUBLE PRECISION STATEMENTS
C        APPEARING IN OTHER ROUTINES USED IN CONJUNCTION WITH THIS
C        ROUTINE.
C
C        THE DOUBLE PRECISION VERSION OF THIS SUBROUTINE MUST ALSO
C        CONTAIN DOUBLE PRECISION FORTRAN FUNCTIONS.  ABS IN STATEMENT
C        10 MUST BE CHANGED TO DABS.
C
C        ..............................................................
C
C        SEARCH FOR LARGEST ELEMENT
C
      D=1.0
      NK=-N
```

```
      DO 80 K=1,N
      NK=NK+N
      L(K)=K
      M(K)=K
      KK=NK+K
      BIGA=A(KK)
      DO 20 J=K,N
      IZ=N*(J-1)
      DO 20 I=K,N
      IJ=IZ+I
   10 IF(DABS(BIGA)-DABS(A(IJ))) 15,20,20
   15 BIGA=A(IJ)
      L(K)=I
      M(K)=J
   20 CONTINUE
C
C        INTERCHANGE ROWS
C
      J=L(K)
      IF(J-K) 35,35,25
   25 KI=K-N
      DO 30 I=1,N
      KI=KI+N
      HOLD=-A(KI)
      JI=KI-K+J
      A(KI)=A(JI)
   30 A(JI) =HOLD
C
C        INTERCHANGE COLUMNS
C
   35 I=M(K)
      IF(I-K) 45,45,38
   38 JP=N*(I-1)
      DO 40 J=1,N
      JK=NK+J
      JI=JP+J
      HOLD=-A(JK)
      A(JK)=A(JI)
   40 A(JI) =HOLD
C
C        DIVIDE COLUMN BY MINUS PIVOT (VALUE OF PIVOT ELEMENT IS
C        CONTAINED IN BIGA)
   45 IF(BIGA) 48,46,48
   46 D=0.0
      RETURN
   48 DO 55 I=1,N
      IF(I-K) 50,55,50
   50 IK=NK+I
      A(IK)=A(IK)/(-BIGA)
   55 CONTINUE
C
C        REDUCE MATRIX
C
      DO 65 I=1,N
      IK=NK+I
```

```
      HOLD=A(IK)
      IJ=I-N
      DO 65 J=1,N
      IJ=IJ+N
      IF(I-K) 60,65,60
   60 IF(J-K) 62,65,62
   62 KJ=IJ-I+K
      A(IJ)=HOLD*A(KJ)+A(IJ)
   65 CONTINUE
C
C        DIVIDE ROW BY PIVOT
C
      KJ=K-N
      DO 75 J=1,N
      KJ=KJ+N
      IF(J-K) 70,75,70
   70 A(KJ)=A(KJ)/BIGA
   75 CONTINUE
C
C        PRODUCT OF PIVOTS
C
      D=D*BIGA
C
C        REPLACE PIVOT BY RECIPROCAL
C
      A(KK)=1.0/BIGA
   80 CONTINUE
C
C        FINAL ROW AND COLUMN INTERCHANGE
C
      K=N
  100 K=(K-1)
      IF(K) 150,150,105
  105 I=L(K)
      IF(I-K) 120,120,108
  108 JQ=N*(K-1)
      JR=N*(I-1)
      DO 110 J=1,N
      JK=JQ+J
      HOLD=A(JK)
      JI=JR+J
      A(JK)=-A(JI)
  110 A(JI) =HOLD
  120 J=M(K)
      IF(J-K) 100,100,125
  125 KI=K-N
      DO 130 I=1,N
      KI=KI+N
      HOLD=A(KI)
      JI=KI-K+J
      A(KI)=-A(JI)
  130 A(JI) =HOLD
      GO TO 100
  150 RETURN
      END
```

APPENDIX IV

The Computer Program to Design Deterministic Observer (Stabilizer Type III)

```
      REAL L(4,4)
      DIMENSION A(4,4),GAMA(4,4),AS(4,4),BETA(4,4),F12(4,4),F11(4,4)
      DIMENSION F21(4,4),F22(4,4),W(4,4),WI(4,4),AI(4,4),ALPHA(4,4)
      DIMENSION DUMM1(4,4),DUMM2(4,4),DUMM3(4,4),DUMM4(4,4),DUMM5(4,4),
     *DUMM6(4,4),GAMAI(4,4),LL(4),MM(4)
      DIMENSION C(10)
      COMMON/INOU/KIN,KOUT
      COMMON/MAIN1/NDIM,DUM1(4,4)
      COMMON/MAIN2/DUM2(4,4)
      COMMON/MAIN3/DUM3(4,4)
      NDIM=4
      KIN=5
      KOUT=6
      M=2
      N=4
      CALL MATIO(1,M,BETA,4)
      CALL MATIO(N,1,GAMA,4)
      CALL MATIO(M,M,F11,4)
      CALL MATIO(M,N,F12,4)
      CALL MATIO(N,M,F21,4)
      CALL MATIO(N,N,F22,4)
      CALL CHREGA(F22,N,C)
      N11=N+1
      DO 83 I=1,N11
      WRITE(6,31) C(I)
   31 FORMAT(1X,E20.8)
   83 CONTINUE
      CALL MMUL(BETA,F12,1,M,N,DUMM1)
      CALL MMUL(DUMM1,F22,1,N,N,DUMM2)
      CALL MMUL(DUMM2,F22,1,N,N,DUMM3)
      CALL MMUL(DUMM3,F22,1,N,N,DUMM4)
      DO 10 J=1,N
      W(1,J) = DUMM1(1,J)
      W(2,J) = DUMM2(1,J)
      W(3,J) = DUMM3(1,J)
      W(4,J) = DUMM4(1,J)
   10 CONTINUE
      DO 80 J=1,N
      DO 80 I=1,N
      A(I,J) = 0.0
      A(I,I) = 1.0
   80 CONTINUE
      A(2,1)=C(4)
      A(3,1)=C(3)
      A(3,2)=C(4)
      A(4,1)=C(2)
      A(4,2)=C(3)
      A(4,3)=C(4)
      WRITE(6,81)
   81 FORMAT(//,' MATRIX A')
      CALL MATIO(N,N,A,3)
      AS(1)=C(4)
      AS(2)=C(3)
      AS(3)=C(2)
```

```
      AS(4)=C(1)
      CALL GMINV(N,N,W,WI,MR,1)
      CALL GMINV(N,N,A,AI,MR,1)
      WRITE(6,27)
   27 FORMAT(//,' MATRIX WI')
```

```
      CALL MATIO(N,N,WI,3)
      WRITE(6,28)
   28 FORMAT(//,' MATRIX AI')
      CALL MATIO(N,N,AI,3)
      DO 6 I=1,N
    6 GAMA1(I,1)=GAMA(I,1)-AS(I,1)
      CALL MMUL(WI,AI,N,N,N,DUMM1)
      CALL MMUL(DUMM1,GAMA1,N,N,1,ALPHA)
      CALL MMUL(ALPHA,BETA,N,1,M,L)
      WRITE(6,100)
  100 FORMAT(//,' MATRIX L')
      CALL MATIO(N,M,L,3)
      CALL MMUL(L,F11,N,M,M,DUMM1)
      DO 20 I=1,N
      DO 20 J=1,M
   20 DUMM2(I,J) = F21(I,J)-DUMM1(I,J)
      WRITE(6,101)
  101 FORMAT(//,' MATRIX F21-LF11')
      CALL MATIO(N,M,DUMM2,3)
      CALL MMUL(L,F12,N,M,N,DUMM3)
      DO 30 I=1,N
      DO 30 J=1,N
   30 DUMM4(I,J)=F22(I,J)-DUMM3(I,J)
      WRITE(6,102)
  102 FORMAT(//,' MATRIX F22-LF12')
      CALL MATIO(N,N,DUMM4,3)
   55 CONTINUE
      END
```

```
      SUBROUTINE CHREQA(A,N,C)
      DIMENSION J(5),C(5),B(4,4),A(4,4),D(300)
      NN=N+1
      DO 20 I=1,NN
   20 C(I)=0.0
      C(NN)=1.0
      DO 14 M=1,N
      K=0
      L=1
      J(1)=1
      GO TO 2
    1 J(L)=J(L)+1
    2 IF(L-M) 3,5,50
    3 MM=M-1
      DO 4 I=L,MM
      II=I+1
```

```
    4 J(II)=J(I)+1
    5 DO 10 I=1,M
      DO 10 KK=1,M
      NR=J(I)
      NC=J(KK)
   10 B(I,KK)=A(NR,NC)
      K=K+1
      D(K)=DET(B,M)
      DO 6 I=1,M
      L=M-I+1
      IF(J(L)-(N-M+L)) 1,6,50
    6 CONTINUE
      M1=N-M+1
      DO 14 I=1,K
   14 C(M1)=C(M1)+D(I)*(-1.0)**M
      RETURN
   50 WRITE(6,2000)
 2000 FORMAT(1H0,5X,'ERROR IN CHREQA')
      RETURN
      END
      FUNCTION DET(A,KC)
      DIMENSION A(4,4),B(4,4)
      IREV=0
      DO 1 I=1,KC
      DO 1 J=1,KC
    1 B(I,J)=A(I,J)
      DO 20 I=1,KC
      K=I
    9 IF(B(K,I)) 10,11,10
   11 K=K+1
      IF(K-KC)9,9,51
   10 IF(I-K) 12,14,51
   12 DO 13 M=1,KC
      TEMP=B(I,M)
      B(I,M)=B(K,M)
   13 B(K,M)=TEMP
      IREV=IREV+1
   14 II=I+1
      IF(II.GT.KC) GO TO 20
      DO 17 M=II,KC
   18 IF(B(M,I)) 19,17,19
   19 TEMP=B(M,I)/B(I,I)
      DO 16 N=1,KC
   16 B(M,N)=B(M,N)-B(I,N)*TEMP
   17 CONTINUE
   20 CONTINUE
      DET=1.0
      DO 2 I=1,KC
    2 DET=DET*B(I,I)
      DET=(-1.0)**IREV*DET
      RETURN
   51 DET=0.0
      RETURN
      END
```

APPENDIX V

The Computer Program to Design Kalman Gain Matrix K_e (Stabilizer Type IV)

```
      IMPLICIT REAL*8 (A-H,O-Z)
      DIMENSION A(12,12),B(12,12),D(12,12),E(12,12)
      DIMENSION L1(12),M1(12),L2(12),M2(12)
      DIMENSION B2(12,12),L3(6),M3(6)
      DIMENSION P(6,6),Q(6,6),ETA(1,6),ETAT(6,1),ETAP(1,6),ETAQ(1,6)
      DIMENSION R(1,1),BT(1,6),RBT(1,6)
      M=6
      N=12
      MR=1
      READ(5,1) MAX,EPS
    1 FORMAT(I5,F15.7)
      WRITE(6,1) MAX,EPS
      READ(5,10) (ETA(1,J),J=1,M)
   10 FORMAT(6F8.4)
      WRITE(6,5000) (ETA(1,J),J=1,M)
 5000 FORMAT(6F13.5,//)
      READ(5,11) (ETAT(I,1),I=1,M)
   11 FORMAT(F8.0)
      WRITE(6,5001) (ETAT(I,1),I=1,M)
 5001 FORMAT((6F13.5,/),//)
      READ(5,12) ((R(I,J),J=1,MR),I=1,MR)
   12 FORMAT(F8.3)
      WRITE(6,5002) ((R(I,J),J=1,MR),I=1,MR)
 5002 FORMAT (F13.5,//)
      READ(5,27) ((BT(I,J),J=1,M),I=1,MR)
   27 FORMAT(6F10.4)
      WRITE(6,5003) ((BT(I,J),J=1,M),I=1,MR)
 5003 FORMAT(6(3X,E13.6),//)
      READ(5,27) ((A(I,J),J=1,N),I=1,N)
      WRITE(6,5004) ((A(I,J),J=1,N),I=1,N)
 5004 FORMAT(12(6(3X,E13.6),/,6(3X,E13.6),/),//)
      DO 20 I=1,N
      DO 20 J=1,N
   20 B(I,J)=A(I,J)
      DO 29 K=1,MAX
      DO 32 I=1,N
      DO 32 J=1,N
   32 E(I,J)=B(I,J)
      CALL MINV(E,N,ZI,L1,M1)
      DO 30 I=1,N
      DO 30 J=1,N
   30 B(I,J)=0.5*(B(I,J)+E(I,J))
      CALL GMPRD(B,B,B2,N,N,N)
      BB=0.0
      BA=0.0
      DO 300 I=1,N
      BA=BA+B(I,I)
  300 BB=BB+B2(I,I)
      DEL=DABS(BB-12.0)
      WRITE(6,5005) DEL,BA
 5005 FORMAT(F13.5,/)
      IF (DEL .LE. EPS) GO TO 31
   29 CONTINUE
```

```
 31 WRITE(6,60)  ((A(I,J),J=1,N),I=1,N)
    WRITE(6,61) ((B(I,J),J=1,N),I=1,N)
    WRITE(6,1) K,DEL
 60 FORMAT(1X,9HMATRIX A:,/,12(6(3X,E13.6),/,6(3X,E13.6),/),//)
 61 FORMAT(1X,9HMATRIX B:,/,12(6(3X,E13.6),/,6(3X,E13.6),/),//)
    DO 70 I=1,N
```

```
    DO 70 J=1,N
 70 E(I,J)=0.0
    DO 80 I=1,M
 80 E(I,I)=-1.0
    DO 90 I=8,N
 90 E(I,I)=1.0
    DO 40 I=1,N
    DO 40 J=1,N
 40 E(I,J)=E(I,J)+B(I,J)
    CALL MINV(E,N,Z2,L2,M2)
    DO 100 I=1,N
    DO 100 J=1,N
100 D(I,J)=2.0*E(I,J)
    WRITE(6,63) ((D(I,J),J=1,N),I=1,N)
 63 FORMAT(1X,9HMATRIX D:,/,12(6(3X,E13.6),/,6(3X,E13.6),/),//)
    DO 200 IX=1,M
    DO 200 IY=1,M
    P(IX,IY)=D(IX,IY+6)
200 Q(IX,IY)=-D(IX+6,IY)
    CALL MINV(Q,M,Z3,L3,M3)
    WRITE(6,201) ((P(I,J),J=1,M),I=1,M)
201 FORMAT(1X,9HMATRIX P:,/,6(6(3X,E13.6),/))
    WRITE(6,202) ((Q(I,J),J=1,M),I=1,M)
202 FORMAT(1X,9HMATRIX Q:,/,6(6(3X,E13.6),/))
    CALL GMPRD(ETA,P,ETAP,1,M,M)
    CALL GMPRD(ETAP,ETAT,EPE,1,M,1)
    CALL GMPRD(ETA,Q,ETAQ,1,M,M)
    CALL GMPRD(ETAQ,ETAT,EQE,1,M,1)
    WRITE(6,203) EPE,EQE
203 FORMAT(1X,'EPE=',E15.8,10X,'EQE=',E15.8)
    STOP
    END
```

```
C
      SUBROUTINE GMPRD(A,B,R,N,M,L)
      IMPLICIT REAL*8 (A-H,O-Z)
      DIMENSION A(1),B(1),R(1)
C
      IR=0
      IK=-M
      DO 10 K=1,L
      IK=IK+M
      DO 10 J=1,N
      IR=IR+1
      JI=J-N
      IB=IK
      R(IR)=0
      DO 10 I=1,M
      JI=JI+N
      IB=IB+1
   10 R(IR)=R(IR)+A(JI)*B(IB)
      RETURN
      END
C
      SUBROUTINE MINV(A,N,D,L,M)
      DIMENSION A(1),L(1),M(1)
C
C        ..................................................................
C
C        IF A DOUBLE PRECISION VERSION OF THIS ROUTINE IS DESIRED, THE
C        C IN COLUMN 1 SHOULD BE REMOVED FROM THE DOUBLE PRECISION
C        STATEMENT WHICH FOLLOWS.
C
      DOUBLE PRECISION A,D,BIGA,HOLD
C
C        THE C MUST ALSO BE REMOVED FROM DOUBLE PRECISION STATEMENTS
C        APPEARING IN OTHER ROUTINES USED IN CONJUNCTION WITH THIS
C        ROUTINE.
C
C        THE DOUBLE PRECISION VERSION OF THIS SUBROUTINE MUST ALSO
C        CONTAIN DOUBLE PRECISION FORTRAN FUNCTIONS.  ABS IN STATEMENT
C        10 MUST BE CHANGED TO DABS.
C
C        ..................................................................
C
C        SEARCH FOR LARGEST ELEMENT
C
      D=1.0
      NK=-N
      DO 80 K=1,N
      NK=NK+N
      L(K)=K
      M(K)=K
```

```
      KK=NK+K
      BIGA=A(KK)
      DO 20 J=K,N
      IZ=N*(J-1)
      DO 20 I=K,N
      IJ=IZ+I
   10 IF(DABS(BIGA)-DABS(A(IJ))) 15,20,20
   15 BIGA=A(IJ)
      L(K)=I
      M(K)=J
   20 CONTINUE
C
C        INTERCHANGE ROWS
C
      J=L(K)
      IF(J-K) 35,35,25
   25 KI=K-N
      DO 30 I=1,N
      KI=KI+N
      HOLD=-A(KI)
      JI=KI-K+J
      A(KI)=A(JI)
   30 A(JI) =HOLD
C
C        INTERCHANGE COLUMNS
C
   35 I=M(K)
      IF(I-K) 45,45,38
   38 JP=N*(I-1)
      DO 40 J=1,N
      JK=NK+J
      JI=JP+J
      HOLD=-A(JK)
      A(JK)=A(JI)
   40 A(JI) =HOLD
C
C        DIVIDE COLUMN BY MINUS PIVOT (VALUE OF PIVOT ELEMENT IS
C        CONTAINED IN BIGA)
C
   45 IF(BIGA) 48,46,48
   46 D=0.0
      RETURN
   48 DO 55 I=1,N
      IF(I-K) 50,55,50
   50 IK=NK+I
      A(IK)=A(IK)/(-BIGA)
   55 CONTINUE
      DO 65 I=1,N
      IK=NK+I
      HOLD=A(IK)
      IJ=I-N
      DO 65 J=1,N
      IJ=IJ+N
```

```
      IF(I-K) 60,65,60
   60 IF(J-K) 62,65,62
   62 KJ=IJ-I+K
      A(IJ)=HOLD*A(KJ)+A(IJ)
   65 CONTINUE
C
C        DIVIDE ROW BY PIVOT
C
      KJ=K-N
      DO 75 J=1,N
      KJ=KJ+N
      IF(J-K) 70,75,70
   70 A(KJ)=A(KJ)/BIGA
   75 CONTINUE
C
C        PRODUCT OF PIVOTS
C
      D=D*BIGA
C
C        REPLACE PIVOT BY RECIPROCAL
C
      A(KK)=1.0/BIGA
   80 CONTINUE
C
C        FINAL ROW AND COLUMN INTERCHANGE
C
      K=N
  100 K=(K-1)
      IF(K) 150,150,105
  105 I=L(K)
      IF(I-K) 120,120,108
  108 JQ=N*(K-1)
      JR=N*(I-1)
      DO 110 J=1,N
      JK=JQ+J
      HOLD=A(JK)
      JI=JR+J
      A(JK)=-A(JI)
  110 A(JI) =HOLD
  120 J=M(K)
      IF(J-K) 100,100,125
  125 KI=K-N
      DO 130 I=1,N
      KI=KI+N
      HOLD=A(KI)
      JI=KI-K+J
      A(KI)=-A(JI)
  130 A(JI) =HOLD
      GO TO 100
  150 RETURN
      END
```

APPENDIX VI

Computer Programs to Simulate the System with Stabilizers Type I,II,III,IV respectively (Linear Model, Noisefree Case)

```
  PARAMETER GP=7.53,T1=.0425,T2=.229,T3=4.145,T4=.2175,TR=.08366
  DYNAMIC
      TIM = 1.0
      TI = INTGRL(.. ,TIM)
      X = 0.025-TI
      PM = -0.4*PULSE(0.025,X)
      DX1=-5 ,*X1-2 ,*X3-2 0.*X4 +20.00.*U
      X1=INTGRL(0.0,DX1)
      DX2=1.25*X1-1.25*X2
      X2=INTGRL(0.0,DX2)
      DX3=. 375*X1- , 375*X2-X3
      X3=INTGRL(0.0,DX3)
      DX4=0..6318*X2-0.3 3*X4-125.91*X5-0.1859*X6
      X4=INTGRL( , ,DX4)
      DX5=-0.255*X4-.25*X5-0.1334*X6 +0.1*PM
      X5=INTGRL(0.0,DX5)
      DX6=377.*X5
      X6=INTGRL(0.0,DX6)
      DX7=-.255*X4-.25*X5-.133*X6-12.*X7+0.1*PM
      X7=INTGRL(0.0,DX7)
      DX8=-4,86*X4-4,77*X5-2,54*X6-225.*X7-4.6*X8 +0.1*(T3/T4)*PM
      X8=INTGRL(0.0,DX8)
      DX9=-6.79*X4-6.66*X5-3,56*X6-314.*X7+26.5*X8-4.37*X9   ...
      +0.1*((GP*T1*T3)/(T2*T4))*PM
      X9=INTGRL(0.0,DX9)
      U=X9
      E1=X1*X1+X2*X2+X3*X3+X4*X4+X5*X5+X6*X6
      JX=INTGRL(0.0,E1)
      E2=U*U
      JU=INTGRL(0.0,E2)
      J=JX+JU
  TIMER PRDEL=0.1,OUTDEL=0.1,FINTIM=5.0
  PRINT JX,JU,J
  PRTPLOT X1
  PRTPLOT X2
  PRTPLOT X3
  PRTPLOT X4
  PRTPLOT X5
  PRTPLOT X6
END
STOP
```

```
 DYNAMIC
      TIM = 1.0
      TI = INTGRL(0.0,TIM)
      X = 0.25-TI
      PM = -0.4*PULSE(0.0,0.25,X)
      DX1=-5.0*X1-2.0*X3-2.0*X4 +20000.0*U
      C1=INTGRL(0.0,DX1)
      X1=LIMIT(-7.0,7.0,C1)
      DX2=1.25*X1-1.25*X2
      X2=INTGRL(0.0,DX2)
      DX3=0.0375*X1-0.0375*X2-X3
      X3=INTGRL(0.0,DX3)
      DX4=0.6318*X2-0.3163*X4-125.91*X5-0.1859*X6
      X4=INTGRL(0.0,DX4)
      DX5=-0.255*X4-0.25*X5-0.1334*X6 +0.1*PM
      X5=INTGRL(0.0,DX5)
      DX6=377.0*X5
      X6=INTGRL(0.0,DX6)
      U=-1.995*X1-1.2[illegible]2*X2+0.925*X3-22.545*X4+21.568*X5-7.975*X6
      E1=X1*X1+X2*X2+X3*X3+X4*X4+X5*X5+X6*X6
      JX=INTGRL(0.0,E1)
      E2=U*U
      JU=INTGRL(0.0,E2)
      J=JX+JU
 TIMER PRDEL=0.1,OUTDEL=0.1,FINTIM= 5.0
 PRINT JX,JU,J
 PRTPLOT C1
 PRTPLOT X1
 PRTPLOT X2
 PRTPLOT X3
 PRTPLOT X4
 PRTPLOT X5
 PRTPLOT X6
END
STOP
```

```
DYNAMIC
     TIM = 1.0
     TI = INTGRL(0.0,TIM)
     X = 0.25-TI
     PM = -0.4*PULSE(0.025,X)
     DX1=-50.0*X1-20000.0*X3-20000.0*X4 +20000.0*U
     C1=INTGRL(0.0,DX1)
     X1=LIMIT(-7.3,7.3,C1)
     DX2=1.25*X1-1.25*X2
     X2=INTGRL(0.0,DX2)
     DX3=0.375*X1-0.375*X2-X3
     X3=INTGRL(0.0,DX3)
     DX4=0.06318*X2-0.3[illegible]3*X4-125.91*X5-0.1859*X6
     X4=INTGRL(0.0,DX4)
     DX5=-0.255*X4-0.25*X5-0.1334*X6 +0.1*PM
     X5=INTGRL(0.0,DX5)
     DX6=377.0*X5
     X6=INTGRL(0.0,DX6)
     DZ3=.066*X1-.036*X2+10.996*X3H+11.996*X4H-11.996*U
     DZ4=-.0723*X1 +.594*X2-3 .44*X3H-3 .746*X4H-125.91*X5H-.1859*X...
     6H+30.442*U
     DZ5=.00168*X1+.000088*X2+.706*X3H+.45*X4H-0.25*X5H-.1334*X6H ...
     -0.7056*U
     DZ6=.1396*X1+.0735*X2+58.77*X3H+58.77*X4H+377.*X5H-58.67*U
     Z3=INTGRL(0.0,DZ3)
     Z4=INTGRL(0.0,DZ4)
     Z5=INTGRL(0.0,DZ5)
     Z6=INTGRL(0.0,DZ6)
     X3H=Z3+.0006*X1+.0012*X2
     X4H=Z4-.0152*X1-.0[illegible]3 4=X2
     X5H=Z5+.000035*X1+.000071*X2
     X6H=Z6+.00294*X1+.00588*X2
     U=-1.995*X1-1.202*X2 +0.925*X3H-22.545*X4H+21.568*X5H-7.975*X6H
     E1=X1*X1+X2*X2+X3*X3+X4*X4+X5*X5+X6*X6
     JX=INTGRL(0.0,E1)
     E2=U*U
     JU=INTGRL(0.0,E2)
     J=JX+JU
TIMER PRDEL=0.1,OUTDEL=0.1,FINTIM= 5.0
PRINT JX,JU,J
PRTPLOT C1
PRTPLOT X1
PRTPLOT X1H
PRTPLOT X2
PRTPLOT X2H
PRTPLOT X3
PRTPLOT X3H
PRTPLOT X4
PRTPLOT X4H
PRTPLOT X5
PRTPLOT X5H
PRTPLOT X6
PRTPLOT X6H
END
STOP
```

```
  DYNAMIC
      TIM = 1.0
      TI = INTGRL(0.0,TIM)
      X = 0.25-TI
      PM = -0.4*PULSE(0.0,25,X)
      DX1=-50.0*X1-200000.0*X3-200000.0*X4 +200000.0*U
      C1=INTGRL(0.0,DX1)
      X1=LIMIT(-7.3,7.3,C1)
      DX2=1.25*X1-1.25*X2
      X2=INTGRL(0.0,DX2)
      DX3=0.0375*X1-0.0375*X2-X3
      X3=INTGRL(0.0,DX3)
      DX4=0.06318*X2-0.303*X4-125.91*X5-0.1859*X6
      X4=INTGRL(0.0,DX4)
      DX5=-0.255*X4-0.25*X5-0.1334*X6 +0.1*PM
      X5=INTGRL(0.0,DX5)
      DX6=377.0*X5
      X6=INTGRL(0.0,DX6)
      DX1H=-50.0*X1H-200000.0*X3H-200000.0*X4H+200000.0*U+1.847*(X5-X5H)
      X1H=INTGRL(0.0,DX1H)
      DX2H=1.25*X1H-1.25*X2H +1.238*(X5-X5H)
      X2H=INTGRL(0.0,DX2H)
      DX3H=0.0375*X1H-0.0375*X2H-X3H -487.59*(X5-X5H)
      X3H=INTGRL(0.0,DX3H)
      DX4H=0.06318*X2H-0.303*X4H-125.91*X5H-0.1859*X6H ...
      -489.30*(X5-X5H)
      X4H=INTGRL(0.0,DX4H)
      DX5H=-0.255*X4H-0.25*X5H-0.1334*X6H+351.58*(X5-X5H)
      X5H=INTGRL(0.0,DX5H)
      DX6H=377.0*X5H+0.725*(X5-X5H)
      X6H=INTGRL(0.0,DX6H)
      U=-1.995*X1H-1.202*X2H+0.925*X3H-22.545*X4H+21.568*X5H-7.975*X6H
      E1=X1*X1+X2*X2+X3*X3+X4*X4+X5*X5+X6*X6
      JX=INTGRL(0.0,E1)
      E2=U*U
      JU=INTGRL(0.0,E2)
      J=JX+JU
  TIMER PRDEL=0.1,OUTDEL=0.1,FINTIM=15.0
  PRINT JX,JU,J
  PRTPLOT C1
  PRTPLOT X1
  PRTPLOT X1H
  PRTPLOT X2
  PRTPLOT X2H
  PRTPLOT X3
  PRTPLOT X3H
  PRTPLOT X4
  PRTPLOT X4H
  PRTPLOT X5
  PRTPLOT X5H
  PRTPLOT X6
  PRTPLOT X6H
END
STOP
```

APPENDIX VII

Computer Programs to Simulate the System
with Stabilizers Type I,II,III,IV respectively
(Nonlinear Model, Noise-free case)

```
INCON X5 = .0,X6 =1.78323,Y1 =2.436565,Y2 =1.3 23 1
PARAMETER  TDO1=6.0,XE=1.0,E=1.0,TM=1 .,D=2.5,XD=1.6,XQ=1.55,XD1=0.32
PARAMETER GP=7.53,T1=.0425,T2=.229,T3=4.145,T4=.2175,TR=.08366
DYNAMIC
     TIM = 1,
     TI  = INTGRL(0.0,TIM)
     X = 0.25-TI
     PM = 0.4*PULSE( .25,X)
     DX1=-50.0*X1-20000.0*X3-20000.0*X4 +20000.0*U +20000.0
     C1=INTGRL(0.0,DX1)
     X1=LIMIT(-7.5,7.5,C1)
     DX2=1.25*X1-1.25*X2
     X2=INTGRL( .0,DX2)
     DX3=0.0375*X1- .0375*X2-X3
     X3=INTGRL(0.0,DX3)
     EQ=((XE+XQ)/(XE+XD1))*EQ1-((XQ-XD1)/(XE+XD1))*E*COS(X6)
     EFD=2.436565+X2
     DY1=(1./TDO1)*(EFD-Y1)
     Y1=INTGRL(Y1 ,DY1)
     DY2=(1./TDO1)*(((XQ-XD1)/(XE+XQ))*(EQ-E*COS(X6))-Y2)
     Y2=INTGRL(Y2 ,DY2)
     EQ1=Y1-Y2
     VQ=EQ1-XD1*ID
     VD=XQ*IQ
     ID=(EQ-E*COS(X6))/(XE+XQ)
     IQ=E*SIN(X6)/(XE+XQ)
     PE=EQ*IQ
     X4=SQRT(VD*VD+VQ*VQ)
     PA=-PE-D*X5+PM+0.3 5391
     PA1=PA/TM
     X5=INTGRL(X5 ,PA1)
     DX6=X5-377.0
     X6=INTGRL(X6 ,DX6)
     DX7=-.255*X5--.25*X5-.133*X6-12.*X7+ .1*PM
     X7=INTGRL(0.0,DX7)
     DX8=-4.86*X4-4.77*X5-2.54*X6-225.*X7-4.6*X8 +0.1*(T3/T4)*PM
     X8=INTGRL(0.0,DX8)
     DX9=-6.79*X4-6.66*X5-3.56*X6-314.*X7+26.5*X8-4.37*X9    ...
     +0.1*((GP*T1*T3)/(T2*T4))*PM
     X9=INTGRL( .0,DX9)
     U=X9
  TIMER PRDEL=0.1,CUTDEL=0.1,FINTIM= 5.0
  PRTPLOT C1
  PRTPLOT X1
  PRTPLOT X2
  PRTPLOT X3
  PRTPLOT X4
  PRTPLOT X5
  PRTPLOT X6
END
STOP
```

```
   INCON X50=0.0,X60=1.78323,Y10=2.436565,Y20=1.302301
   PARAMETER  TDO1=6.5,XE=1.0,E=1.0,TM=1 ,,D=2.5,XD=1.6,XQ=1.55,XD1=0.32
 DYNAMIC
        TIM=1.
        TI=INTGRL(0.0,TIM)
        X=.0125-TI
        PM=-0.4*PULSE( .025,X)
        DX1=-50.0*X1-2 000.0*X3-20000.0*X4 +20000.0*U+20000.0
        C1=INTGRL( , ,DX1)
        X1=LIMIT(-7.3,7.3,C1)
        DX2=1.25*X1-1.25*X2
        X2=INTGRL( , ,DX2)
        DX3=0.0375*X1-0.0375*X2-X3
        X3=INTGRL(0.0,DX3)
        EQ=((XE+XQ)/(XE+XD1))*EQ1-((XQ-XD1)/(XE+XD1))*E*COS(X6)
        EFD=2.436565+X2
        DY1=(1./TDO1)*(EFD-Y1)
        Y1=INTGRL(Y10,DY1)
        DY2=(1./TDO1)*(((XD-XD1)/(XE+XQ))*(EQ-E*COS(X6))-Y2)
        Y2=INTGRL(Y20,DY2)
        EQ1=Y1-Y2
        VQ=EQ1-XD1*ID
        VD=XQ*IQ
        ID=(EQ-E*COS(X6))/(XE+XQ)
        IQ=E*SIN(X6)/(XE+XQ)
        PE=EQ*IQ
        X4=SQRT(VD*VD+VQ*VQ)
        PA=-PE-D*X5+PM+0.905391
        PA1=PA/TM
        X5=INTGRL(X50,PA1)
        DX6=377.0*X5
        X6=INTGRL(X60,DX6)
        X1H= X1- .
        X2H= X2-0.0
        X3H= X3-0.0
        X4H= X4-1.
        X5H= X5-0.0
        X6H=X6-1.78323
        U=-1.995*X1H-1.2 2*X2H+ .925*X3H-22.545*X4H+21.568*X5H-7.975*X6H
   TIMER PRDEL=0.1,OUTDEL=0.1,FINTIM= 5.0
   PRTPLOT X1
   PRTPLOT X2
   PRTPLOT X3
   PRTPLOT X4
   PRTPLOT X5
   PRTPLOT X6
END
STOP
```

```
INCON X50= .0,X60=1.78323,Y10=2.436565,Y20=1.3[illegible]231
PARAMETER  TDO1=6.5,XE=1.0,E=.99,TM=10.,D=2.5,XD=1.6,XQ=1.55,XD1=0.32
DYNAMIC
    TIM = 1.0
    TI = INTGRL(0. ,TIM)
    X = 0.025-TI
    PM = -0.4*PULSE(0.,25,X)
    DX1=-5[illegible]*X1-2[illegible]*X3-20[illegible]*X4 +20[illegible]*U+2[illegible]
    C1=INTGRL(0.0,DX1)
    X1=LIMIT(-7.3,7.3,C1)
    DX2=1.25*X1-1.25*X2
    X2=INTGRL(0.0,DX2)
    DX3=0.0375*X1-[illegible].0375*X2-X3
    X3=INTGRL(0.0,DX3)
    EQ=((XE+XQ)/(XE+XD1))*EQ1-((XQ-XD1)/(XE+XD1))*E*COS(X6)
    EFD=2.436565+X2
    DY1=(1./TDO1)*(EFD-Y1)
    Y1=INTGRL(Y1 ,DY1)
    DY2=(1./TDO1)*(((XQ-XD1)/(XE+XQ))*(EQ-E*COS(X6))-Y2)
    Y2=INTGRL(Y20,DY2)
    EQ1=Y1-Y2
    VQ=EQ1-XD1*ID
    VD=XQ*IQ
    ID=(EQ-E*COS(X6))/(XE+XQ)
    IQ=E*SIN(X6)/(XE+XQ)
    PE=EQ*IQ
    X4=SQRT(VD*VD+VQ*VQ)
    PA=-PE-D*X5+PM+0.9[illegible]5391
    PA1=PA/TM
    X5=INTGRL(X50,PA1)
    DX6=377.0*X5
    X6=INTGRL(X6 ,DX6)
    DZ3=.066*X1-.036*X2+10.996*X3H+11.996*X4H-11.996*U
    DZ4=-.0723*X1 +.594*X2-30.44*X3H-30.746*X4H-125.91*X5H-.1859*X...
    6H+3 .442*U
    DZ5=.00168*X1+.000088*X2+.706*X3H+.45*X4H-0.25*X5H-.1334*X6H ...
    -0.7056*U
    DZ6=.1396*X1+.0735*X2+58.77*X3H+58.77*X4H+377.*X5H-58.67*U
    Z3=INTGRL(0.0,DZ3)
    Z4=INTGRL(0.0,DZ4)
    Z5=INTGRL(0.0,DZ5)
    Z6=INTGRL(0.0,DZ6)
    X3H=Z3+.0006*X1+.012*X2
    X4H=Z4-.00152*X1-.00304*X2
    X5H=Z5+.0[illegible]35*X1+.0[illegible]71*X2
    X6H=Z6+.00294*X1+.0588*X2
    U=-1.995*X1-1.202*X2 +0.925*X3H-22.545*X4H+21.568*X5H-7.975*X6H
TIMER PRDEL=0.1,OUTDEL=0.1,FINTIM= 5..
PRTPLOT C1
PRTPLOT X1
PRTPLOT X2
PRTPLOT X3
PRTPLOT X3H
PRTPLOT X4
PRTPLOT X4H
PRTPLOT X5
PRTPLOT X5H
PRTPLOT X6

 PRTPLOT X6H
END
STOP
```

```
INCON X50=0.0,X60=1.78323,Y10=2.436565,Y20=1.302301
PARAMETER   TDO1=6.5,XE=1.0,E=.99,TM=10.,D=2.5,XD=1.6,XQ=1.55,XD1=0.32
DYNAMIC
     TIM = 1.
     TI  = INTGRL(0.0,TIM)
     X = 0.025-TI
     PM = - .4*PULSE(0. 25,X)
     DX1=-50.0*X1-20000.0*X3-20000.0*X4 +20000.0*U+20000.0
     C1=INTGRL(0.0,DX1)
     X1=LIMIT(-7.3,7.3,C1)
     DX2=1.25*X1-1.25*X2
     X2=INTGRL(0.0,DX2)
     DX3=0.0375*X1- .0375*X2-X3
     X3=INTGRL(0. ,DX3)
     EQ=((XE+XQ)/(XE+XD1))*EQ1-((XQ-XD1)/(XE+XD1))*E*COS(X6)
     EFD=2.436565+X2
     DY1=(1./TDO1)*(EFD-Y1)
     Y1=INTGRL(Y10,DY1)
     DY2=(1./TDO1)*(((XD-XD1)/(XE+XQ))*(EQ-E*COS(X6))-Y2)
     Y2=INTGRL(Y20,DY2)
     EQ1=Y1-Y2
     VQ=EQ1-XD1*ID
     VD=XQ*IQ
     ID=(EQ-E*COS(X6))/(XE+XQ)
     IQ=E*SIN(X6)/(XE+XQ)
     PE=EQ*IQ
     X4=SQRT(VD*VD+VQ*VQ)
     PA=-PE-D*X5+PM+ .9 5391
     PA1=PA/TM
     X5=INTGRL(X50,PA1)
     DX6=377. *X5
     X6=INTGRL(X60,DX6)
     DX1H=-50.0*X1H-20000.0*X3H-20000.0*X4H+20000.0*U+1.847*(X5-X5H)
     X1H=INTGRL(0.0,DX1H)
     DX2H=1.25*X1H-1.25 X2H +1.238*(X5-X5H)
     X2H=INTGRL(0.0,DX2H)
     DX3H=0.0375*X1H- .375*X2H-X3H -487.59*(X5-X5H)
     X3H=INTGRL(0.0,DX3H)
     DX4H=0.06318*X2H-0.303*X4H-125.91*X5H-0.1859*X6H ...
     -489.35*(X5-X5H)
     X4H=INTGRL( . ,DX4H)
     DX5H=-0.255*X4H-0.25*X5H-0.1334*X6H+351.58*(X5-X5H)
     X5H=INTGRL(0.0,DX5H)
     DX6H=377. *X5H+ .725*(X5-X5H)
     X6H=INTGRL(0.0,DX6H)
     U=-1.995*X1H-1.202*X2H+0.925*X3H-22.545*X4H+21.568*X5H-7.975*X6H
  TIMER PRDEL=0.1,OUTDEL=0.1,FINTIM= 5.0
  PRTPLOT C1
  PRTPLOT X1
  PRTPLOT X1H
  PRTPLOT X2
  PRTPLOT X2H
  PRTPLOT X3
  PRTPLOT X3H
  PRTPLOT X4
  PRTPLOT X4H
  PRTPLOT X5
  PRTPLOT X5H

  PRTPLOT X6
  PRTPLOT X6H
END
STOP
```

APPENDIX VIII

Compuetr Programs to Simulate the System with Type II,III,and IV Stabilizers Respectively. (Linear Model with Noise)

```
  PARAMETER P1=[illegible] 1[illegible],P2=0.[illegible] 1[illegible]
  DYNAMIC
      TIM = 1.0
      TI = INTGRL(0.0,TIM)
      X = [illegible] 25-TI
      PM = -[illegible].4*PULSE(0.[illegible]25,X)
      NS1=GAUSS(1,[illegible] ,P1)
      DX1=-5[illegible] *X1-2[illegible]*X3-2[illegible]*X4 +20000[illegible]*U +NS1
      C1=INTGRL(0.0,DX1)
      X1=LIMIT(-7.3,7.3,C1)
      NS2=GAUSS(3,[illegible] ,P1)
      DX2=1.25*X1-1.25*X2 +NS2
      X2=INTGRL(0.0,DX2)
      NS3=GAUSS(5,[illegible] ,P1)
      DX3=[illegible] 375*X1-[illegible].0375*X2-X3  +NS3
      X3=INTGRL(0.0,DX3)
      NS4=GAUSS(7,[illegible],P1)
      DX4=[illegible] 6318*X2-[illegible].3[illegible]3*X4-125.91*X5-[illegible].1859*X6  +NS4
      X4=INTGRL(0.0,DX4)
      NS5=GAUSS(9,[illegible],P1)
      DX5=-0.255*X4-[illegible].25*X5-[illegible].1334*X6 +[illegible].1*PM   +NS5
      X5=INTGRL(0.0,DX5)
      NS6=GAUSS(11,0.0,P1)
      DX6=377.0*X5     +NS6
      X6=INTGRL([illegible] ,DX6)
      NM1=GAUSS(1,[illegible] ,P2)
      NM2=GAUSS(3,[illegible],P2)
      NM3=GAUSS(5,[illegible] ,P2)
      NM4=GAUSS(7,0.[illegible],P2)
      NM5=GAUSS(9,[illegible],P2)
      NM6=GAUSS(11,0.0,P2)
      S1 =X1+NM1
      S2 =X2+NM2
      S3 =X3+NM3
      S4 =X4+NM4
      S5 =X5+NM5
      S6 =X6+NM6
      U=-1.995*S1-1.202*S2+0.925*S3-22.545*S4+21.568*S5-7.975*S6
      E1=X1*X1+X2*X2+X3*X3+X4*X4+X5*X5+X6*X6
      JX=INTGRL(0.0,E1)
      E2=U*U
      JU=INTGRL([illegible] ,E2)
      J=JX+JU
  TIMER PRDEL=0.1,OUTDEL=0.1,FINTIM=5.0
  PRINT JX,JU,J
  PRTPLOT X1
  PRTPLOT X2
  PRTPLOT X3
  PRTPLOT X4
  PRTPLOT X5
  PRTPLOT X6
END
STOP
```

```
PARAMETER P1=0.000010,P2=0.000010
DYNAMIC
     TIM = 1.0
     TI = INTGRL(0.0,TIM)
     X = 0.025-TI
     PM = -0.4*PULSE(0.025,X)
     NS1=GAUSS(1,0.0,P1)
     DX1=-50.0*X1-20000.0*X3-20000.0*X4 +20000.0*U +NS1
     C1=INTGRL(0.0,DX1)
     X1=LIMIT(-7.3,7.3,C1)
     NS2=GAUSS(3,0.0,P1)
     DX2=1.25*X1-1.25*X2 +NS2
     X2=INTGRL(0.0,DX2)
     NS3=GAUSS(5,0.0,P1)
     DX3=0.0375*X1-0.0375*X2-X3  +NS3
     X3=INTGRL(0.0,DX3)
     NS4=GAUSS(7,0.0,P1)
     DX4=0.06315*X2-0.303*X4-125.91*X5-0.1359*X6  +NS4
     X4=INTGRL(0.0,DX4)
     NS5=GAUSS(9,0.0,P1)
     DX5=-0.255*X4-0.25*X5-0.1334*X6 +0.1*PM   +NS5
     X5=INTGRL(0.0,DX5)
     NS6=GAUSS(11,0.0,P1)
     DX6=377.0*X5     +NS6
     X6=INTGRL(0.0,DX6)
     NM1=GAUSS(3,0.0,P1)
     S1=X1+NM1
     NM2=GAUSS(5,0.0,P1)
     S2=X2+NM2
     DZ3=.035*S1-.036*S2+10.996*X3H+11.996*X4H-11.996*U
     DZ4=-.0723*S1 +.594*S2-30.44*X3H-30.745*X4H-125.91*X5H-.1859*X...
     6H+30.442*U
     DZ5=.00168*S1+.000025*S2+.706*X3H+.45*X4H-0.25*X5H-.1334*X6H ...
     -0.7050*U
     DZ6=.1395*S1+.00735*S2+58.77*X3H+58.77*X4H+377.*X5H-58.67*U
     Z3=INTGRL(0.0,DZ3)
     Z4=INTGRL(0.0,DZ4)
     Z5=INTGRL(0.0,DZ5)
     Z6=INTGRL(0.0,DZ6)
     X3H=Z3+.0006*S1+.0012*S2
     X4H=Z4-.00152*S1-.00304*S2
     X5H=Z5+.000035*S1+.000071*S2
     X6H=Z6+.00204*S1+.00565*S2
     U=-1.995*S1-1.202*S2 +0.925*X3H-22.545*X4H+21.568*X5H-7.975*X6H
     E1=X1*X1+X2*X2+X3*X3+X4*X4+X5*X5+X6*X6
     JX=INTGRL(0.0,E1)
     E2=U*U
     JU=INTGRL(0.0,E2)
     J=JX+JU
TIMER PRDEL=0.1,OUTDEL=0.1,FINTIM=5.0
PRINT JX,JU,J
PRTPLOT X1
PRTPLOT X2
PRTPLOT X3
PRTPLOT X3H
PRTPLOT X4
PRTPLOT X4H
PRTPLOT X5


PRTPLOT X5H
PRTPLOT X6
PRTPLOT X6H
END
STOP
```

```
PARAMETER P1=0.000010,P2=0.000010
DYNAMIC
     TIM = 1.0
     TI  = INTGRL(0.0,TIM)
     X  = 0.025-TI
     PM  = -0.4*PULSE(0.025,X)
     NS1=GAUSS(1,0.0,P1)
     DX1=-50.0*X1-20000.0*X3-20000.0*X4 +20000.0*U +NS1
     C1=INTGRL(0.0,DX1)
     X1=LIMIT(-7.3,7.3,C1)
     NS2=GAUSS(3,0.0,P1)
     DX2=1.25*X1-1.25*X2  +NS2
     X2=INTGRL(0.0,DX2)
     NS3=GAUSS(5,0.0,P1)
     DX3=0.0375*X1-0.0375*X2-X3   +NS3
     X3=INTGRL(0.0,DX3)
     NS4=GAUSS(7,0.0,P1)
     DX4=0.06319*X2-0.303*X4-125.91*X5-0.1859*X6   +NS4
     X4=INTGRL(0.0,DX4)
     NS5=GAUSS(9,0.0,P1)
     DX5=-0.255*X4-0.25*X5-0.1334*X6 +0.1*PM    +NS5
     X5=INTGRL(0.0,DX5)
     NS6=GAUSS(11,0.0,P1)
     DX6=377.0*X5      +NS6
     X6=INTGRL(0.0,DX6)
     NM5=GAUSS(9,0.0,P2)
     S5  =X5+NM5
     DX1H=-50.0*X1H-20000.0*X3H-20000.0*X4H+20000.0*U +1.947*(S5-X5H)
     X1H=INTGRL(0.0,DX1H)
     DX2H=1.25*X1H-1.25*X2H +1.238*(S5-X5H)
     X2H=INTGRL(0.0,DX2H)
     DX3H=0.0375*X1H-0.0375*X2H-X3H   -437.59*(S5-X5H)
     X3H=INTGRL(0.0,DX3H)
     DX4H=0.06319*X2H-0.303*X4H-125.91*X5H-0.1859*X6H -489.36*(S5-X5H)
     X4H=INTGRL(0.0,DX4H)
     DX5H=-0.255*X4H-0.25*X5H-0.1334*X6H+351.52*(S5-X5H)
     X5H=INTGRL(0.0,DX5H)
     DX6H=377.0*X5H+0.75*(S5-X5H)
     X6H=INTGRL(0.0,DX6H)
     U=-1.305*X1H-1.202*X2H+0.225*X3H-22.543*X4H+21.568*X5H-7.975*X6H
     E1=X1*X1+X2*X2+X3*X3+X4*X4+X5*X5+X6*X6
     JX=INTGRL(0.0,E1)
     E2=U*U
     JU=INTGRL(0.0,E2)
     J=JX+JU
TIMER PRDEL=0.1,OUTDEL=0.1,FINTIM= 5.0
PRINT JX,JU,J
PRTPLOT X1
PRTPLOT X1H
PRTPLOT X2
PRTPLOT X2H
PRTPLOT X3
PRTPLOT X3H
PRTPLOT X4
PRTPLOT X4H
PRTPLOT X5
PRTPLOT X5H
PRTPLOT X6


PRTPLOT X6H
END
STOP
```

APPENDIX IX

Computer Programs to Simulate the System with Stabilizers Type II,III,IV respectively (Nonlinear Model with Noise)

```
  INCON X5C=0.0,X6C=1.78323,Y1C=2.436565,Y2C=1.3 2301
  PARAMETER P1=0.000010,P2=0.000010
  PARAMETER  TDO1=6.5,XE=1.0,E=1.0,TM=10.,D=2.5,XD=1.6,XQ=1.55,XD1=0.32
DYNAMIC
      TIM=1.
      TI=INTGRL(0.0,TIM)
      X=0.025-TI
      PM=-0.4*PULSE(0.025,X)
      NS1=GAUSS(1,0.0,P1)
      DX1=-50.0*X1-20000.0*X3-20000.0*X4 +20000.0*U +NS1 +20000.0
      C1=INTGRL(0.0,DX1)
      X1=LIMIT(-7.3,7.3,C1)
      NS2=GAUSS(3,0.0,P1)
      DX2=1.25*X1-1.25*X2 +NS2
      X2=INTGRL(0.0,DX2)
      NS3=GAUSS(5,0.0,P1)
      DX3=0.0375*X1-0.0375*X2-X3  +NS3
      X3=INTGRL(0.0,DX3)
      EQ=((XE+XQ)/(XE+XD1))*EQ1-((XQ-XD1)/(XE+XD1))*E*COS(X6)
      EFD=2.436565+X2
      DY1=(1./TDO1)*(EFD-Y1)
      Y1=INTGRL(Y1C,DY1)
      DY2=(1./TDO1)*(((XD-XD1)/(XE+XQ))*(EQ-E*COS(X6))-Y2)
      Y2=INTGRL(Y2C,DY2)
      EQ1=Y1-Y2
      VQ=EQ1-XD1*ID
      VD=XQ*IQ
      ID=(EQ-E*COS(X6))/(XE+XQ)
      IQ=E*SIN(X6)/(XE+XQ)
      PE=EQ*IQ
      NS4=GAUSS(7,0.0,P1)
      X4=SQRT(VD*VD+VQ*VQ)  +NS4
      PA=-PE-D*X5+PM+0.935391
      NS5=GAUSS(9,0.0,P1)
      PA1=PA/TM  +NS5
      X5=INTGRL(X5C,PA1)
      NS6=GAUSS(11,0.0,P1)
      DX6=377.0*X5  +NS6
      X6=INTGRL(X6C,DX6)
      NM1=GAUSS(1,0.0,P2)
      NM2=GAUSS(3,0.0,P2)
      NM3=GAUSS(5,0.0,P2)
      NM4=GAUSS(7,0.0,P2)
      NM5=GAUSS(9,0.0,P2)
      NM6=GAUSS(11,0.0,P2)
      S1 =X1+NM1
      S2 =X2+NM2
      S3 =X3+NM3
      S4 =X4+NM4
      S5 =X5+NM5
      S6 =X6+NM6
      X1H = S1 - 0.0
      X2H = S2-0.0
      X3H = S3-0.0
      X4H=S4-1.0
      X5H = S5-0.0
      X6H=S6-1.78323
      U=-1.995*X1H-1.202*X2H+0.925*X3H-22.545*X4H+21.568*X5H-7.975*X6H

  TIMER PRDEL=0.1,OUTDEL=0.1,FINTIM= 5.0
  PRTPLOT X1
  PRTPLOT X2
  PRTPLOT X3
  PRTPLOT X4
  PRTPLOT X5
  PRTPLOT X6
END
STOP
```

```
  INCON X50=0.0,X60=1.73323,Y10=2.436565,Y20=1.302301
  PARAMETER P1=0.000010,P2=0.000010
  PARAMETER  TD01=6.5,XE=1.0,E=1.0,TM=10.,D=2.5,XQ=1.6,XD=1.55,XD1=0.32
DYNAMIC
      TIM=1.0
      TI=INTGRL(0.0,TIM)
      X=0.025-TI
      PM=-0.4*PULSE(0.025,X)
      NS1=GAUSS(1,0.0,P1)
      DX1=-50.0*X1-20000.0*X3-20000.0*X4 +20000.0*U +NS1 +20000.0
      C1=INTGRL(0.0,DX1)
      X1=LIMIT(-7.3,7.3,C1)
      NS2=GAUSS(3,0.0,P1)
      DX2=1.25*X1-1.25*X2 +NS2
      X2=INTGRL(0.0,DX2)
      NS3=GAUSS(5,0.0,P1)
      DX3=0.0375*X1-0.0375*X2-X3  +NS3
      X3=INTGRL(0.0,DX3)
      EQ=((XE+XQ)/(XE+XD1))*EQ1-((XQ-XD1)/(XE+XD1))*E*COS(X6)
      EFD=2.436565+X2
      DY1=(1./TD01)*(EFD-Y1)
      Y1=INTGRL(Y10,DY1)
      DY2=(1./TD01)*(((XD-XD1)/(XE+XQ))*(EQ-E*COS(X6))-Y2)
      Y2=INTGRL(Y20,DY2)
      EQ1=Y1-Y2
      VD=EQ1-XD1*ID
      VQ=XQ*IQ
      ID=(EQ-E*COS(X6))/(XE+XD)
      IQ=E*SIN(X6)/(XE+XQ)
      PE=EQ*IQ
      NS4=GAUSS(7,0.0,P1)
      X4=SQRT(VD*VD+VQ*VQ)  +NS4
      PA=-PE-D*X3+PM+0.995391
      NS5=GAUSS(9,0.0,P1)
      PA1=PA/TM  +NS5
      X5=INTGRL(X50,PA1)
      NS6=GAUSS(11,0.0,P1)
      DX6=377.0*X5  +NS6
      X6=INTGRL(X60,DX6)
      NM1=GAUSS(3,0.0,P1)
      S1=X1+NM1
      NM2=GAUSS(5,0.0,P1)
      S2=X2+NM2
      DZ3=.036*S1-.036*S2+10.996*X3H+11.996*X4H-11.996*U
      DZ4=-.0723*S1 +.594*S2-30.44*X3H-30.746*X4H-125.91*X5H-.1350*X...
      6H+30.442*U
      DZ5=.00168*S1+.000058*S2+.706*X3H+.45*X4H-0.25*X5H-.1334*X6H ...
      -0.7056*U
      DZ6=.1326*S1+.00735*S2+58.77*X3H+58.77*X4H+377.*X5H-58.57*U
      Z3=INTGRL(0.0,DZ3)
      Z4=INTGRL(0.0,DZ4)
      Z5=INTGRL(0.0,DZ5)
      Z6=INTGRL(0.0,DZ6)
      X3H=Z3+.0005*S1+.0012*S2
      X4H=Z4-.00152*S1-.00304*S2
      X5H=Z5+.000035*S1+.000071*S2
      X6H=Z6+.00294*S1+.00589*S2
      U=-1.995*S1-1.202*S2 +0.925*X3H-22.545*X4H+21.560*X5H-7.275*X6H


  TIMER PRDEL=0.1,OUTDEL=0.1,FINTIM=5.0
  PRTPLOT X1
  PRTPLOT X2
  PRTPLOT X3
  PRTPLOT X3H
  PRTPLOT X4
  PRTPLOT X4H
  PRTPLOT X5
  PRTPLOT X5H
  PRTPLOT X6
  PRTPLOT X6H
END
STOP
```

```
   INCON X50=0.0,X60=1.76323,Y10=2.436565,Y20=1.302301
   PARAMETER P1=0.000010,P2=0.000010
   PARAMETER  TD01=6.5,XE=1.0,E=1.0,TM=10.,D=2.5,XD=1.6,XQ=1.55,XD1=0.22
DYNAMIC
        TIM=1.0
        TI=INTGRL(0.0,TIM)
        X=0.025-TI
        PM=-0.4*PULSE(0.025,X)
        NS1=GAUSS(1,0.0,P1)
        DX1=-50.0*X1-20000.0*X3-20000.0*X4 +20000.0*U +NS1 +20000.0
        C1=INTGRL(0.0,DX1)
        X1=LIMIT(-7.3,7.3,C1)
        NS2=GAUSS(3,0.0,P1)
        DX2=1.25*X1-1.25*X2 +NS2
        X2=INTGRL(0.0,DX2)
        NS3=GAUSS(5,0.0,P1)
        DX3=0.0375*X1-0.0375*X2-X3  +NS3
        X3=INTGRL(0.0,DX3)
        EQ=((XE+XQ)/(XE+XD1))*EQ1-((XQ-XD1)/(XE+XD1))*E*COS(X6)
        EFD=2.436565+X2
        DY1=(1./TD01)*(EFD-Y1)
        Y1=INTGRL(Y10,DY1)
        DY2=(1./TD01)*(((XD-XD1)/(XE+XQ))*(EQ-E*COS(X6))-Y2)
        Y2=INTGRL(Y20,DY2)
        EQ1=Y1-Y2
        VQ=EQ1-XD1*ID
        VD=XQ*IQ
        ID=(EQ-E*COS(X6))/(XE+XQ)
        IQ=E*SIN(X6)/(XE+XQ)
        PE=EQ*IQ
        NS4=GAUSS(7,0.0,P1)
        X4=SQRT(VD*VD+VQ*VQ)  +NS4
        PA=-PE-D*X5+PM+0.905391
        NS5=GAUSS(9,0.0,P1)
        PA1=PA/TM  +NS5
        X5=INTGRL(X50,PA1)
        NS6=GAUSS(11,0.0,P1)
        DX6=377.0*X5  +NS6
        X6=INTGRL(X60,DX6)
        NM5=GAUSS(9,0.0,P2)
        S5 =X5+NM5
        DX1H=-50.0*X1H-20000.0*X3H-20000.0*X4H+20000.0*U +1.047*(S5-X5H)
        X1H=INTGRL(0.0,DX1H)
        DX2H=1.25*X1H-1.25*X2H +1.238*(S5-X5H)
        X2H=INTGRL(0.0,DX2H)
        DX3H=0.0375*X1H-0.0375*X2H-X3H  -487.59*(S5-X5H)
        X3H=INTGRL(0.0,DX3H)
        DX4H=0.06312*X2H-0.303*X4H-125.91*X5H-0.1859*X6H -489.36*(S5-X5H)
        X4H=INTGRL(0.0,DX4H)
        DX5H=-0.255*X4H-0.25*X5H-0.1334*X6H+351.58*(S5-X5H)
        X5H=INTGRL(0.0,DX5H)
        DX6H=377.0*X5H+0.725*(S5-X5H)
        X6H=INTGRL(0.0,DX6H)
        U=-1.995*X1H-1.202*X2H+0.925*X3H-22.545*X4H+21.568*X5H-7.975*X6H
   TIMER PRDEL=0.1,OUTDEL=0.1,FINTIM= 5.0
   PRTPLOT X1
   PRTPLOT X1H
   PRTPLOT X2


   PRTPLOT X2H
   PRTPLOT X3
   PRTPLOT X3H
   PRTPLOT X4
   PRTPLOT X4H
   PRTPLOT X5
   PRTPLOT X5H
   PRTPLOT X6
   PRTPLOT X6H
END
STOP
```